
بسم الله الرحمن الرحيم

Ministry of Higher Education and Scientific Research
Foundation of Technical Education
Technical College / Al-Najaf

Training package in Phase Modulation For students of second class

Lecturer
Ahmed H. Hadi

1/ Over view

1 / A –Target population :-

For students of second class in Communications Techniques Engineering Department

1 / B –Rationale :

Angle modulation may be subdivided into distinct types; frequency modulation and phase modulation (PM). Thus, PM and FM are closely allied, and this is first reason for considering PM here. The second reason is somewhat more practical.

1 / C –Central Idea :-

1. **Define phase modulation**
2. **Bandwidth for a PM wave**

1 / D –Objectives:-

- Draw an PM waveform
- Determine by calculation, the modulation index
- Understand the differences between AM, FM, and PM

2/ Pre test :-

1. Define phase modulation

Phase modulation is a type of angle modulation the phase is varied linearly with a modulating signal f(t) about an unmodulated phase angle $w_c t$.

2. Give the mathematical expression for bandwidth for a PM wave

Bandwidth in PM $= 2(\beta+1)f_m$

β=modulation index

3/ Performance Objectives :-

Phase Modulation

There is no basic difference between the mechanisms involved in the generation of phase modulation (PM) and frequency modulation (FM) .In fact, the only difference is that the phase in the modulated waveform is proportional to the input signal amplitude in PM and to the integral of the input signal in FM. This introduces only a slight modification and we shall point that out here.

For an FM signal with the sinusoidal modulation $f(t) = a\cos\mu_m t$,

the instantaneous frequency is $\mu_i(t) = \mu_c + ak_f \cos\mu_m t$

$$= \mu_c + \Delta\mu \cos\mu_m t$$

For PM with the same modulating signal we have

$$\bar{}(t) = \mu_c t + ak_p \cos\mu_m t + \bar{}_0$$

$$= \mu_c t + \Delta\bar{} \cos\mu_m t + \bar{}_0,$$

WhereΔ^{-} is the peak phase deviation (0in radians) and kp is the phase-modulator constant (in radians per volt). The instantaneous frequency is

$$\mu_i(t) = \frac{d^{-}}{dt}$$

$$= \mu_c - ak_p \mu_m \sin \mu_m t$$

$$= \mu_c - \Delta\mu \sin \mu_m t.$$

Thus we see that the peak frequency deviation in PM is proportional not only to the amplitude of the modulating waveform but also to its frequency; that is

$$\Delta\mu = \begin{cases} ak_f & for\ \ FM \\ ak_p\mu_m = (\Delta^{-})\mu_m & for\ \ PM \end{cases}$$

This makes PM less desirable to transmit $\Delta\mu$ ***is fixed (as in commercial FM). There are some advantages in the demodulation of PM, however, which make its use desirable.***

The role of the modulation index remains the same as in FM. .

Formally, then, we can compute

$$\Delta\mu = ak_p\mu_m = (\Delta^{-})\mu_m$$

and then proceed as if the modulation were FM as far as bandwidth, sidebands, etc. are concerned. Note that the numerical value of β is the peak phase deviation, $\Delta\theta$,in the PM case.

Example: A carrier is phase modulated by a sinusoidal signal of 5 kHz and unit amplitude and the peak phase deviation is one radian. Calculate the bandwidth of the PM signal (a) using Carson's rule; (b) Using the definition of significant sidebands.

Solution:

a) $\Delta f = (\Delta^{-})\, f_m = 5\,kHz$

and Carson's rule gives

$$B = (\Delta f + f_m) = 20\,kHz\ .$$

b) $B = \Delta^{-} = 1;$

Using a Bessel function chart

$$B \approx 2nf_m = 2(3)(5\,kHz) = 30\,kHz\ .$$

Frequency multiplier

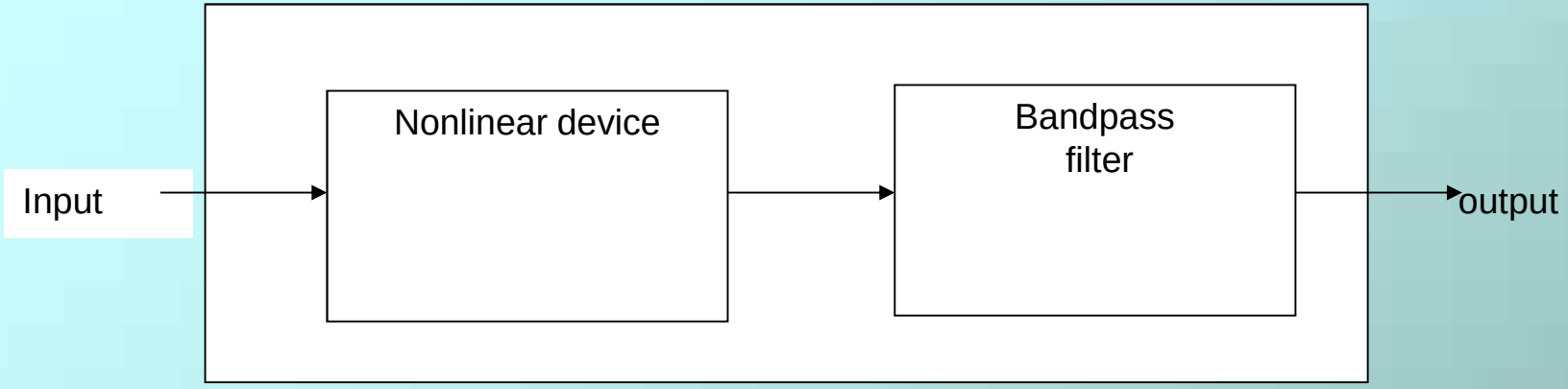

frequency conversion

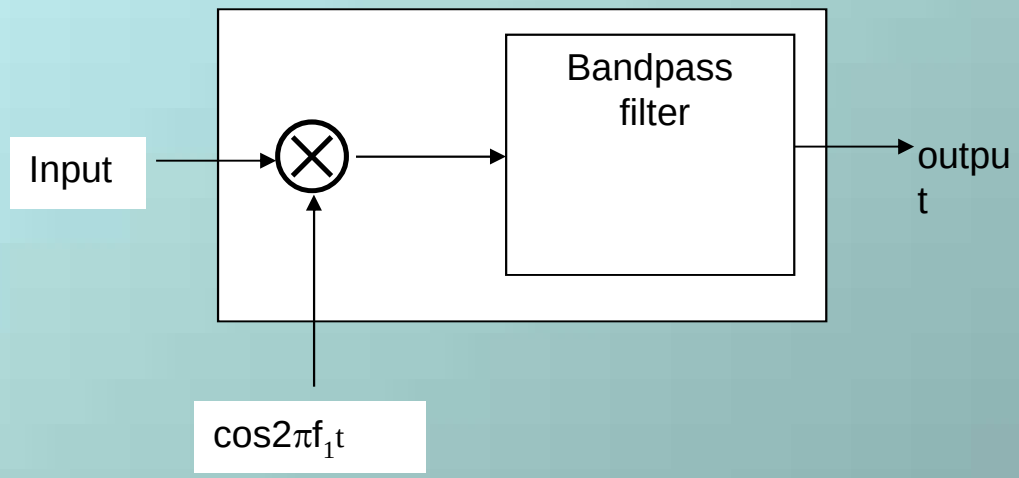

Quiz/

1. What is the difference between in the generation of phase modulation (PM) and frequency modulation (FM)

In fact, the only difference is that the phase in the modulated waveform is proportional to the input signal amplitude in PM and to the integral of the input signal in FM.

5/ Post test :-

2. Give the mathematical expression for modulation index of PM

modulation index of PM in $\beta = k_p E_m$.

2. Define phase deviation

The maximum phase deviation of the total angle from the carrier angle $w_c t$ is called phase deviation.

References

1. Ferrel G. Stremler :
 "Introduction to communication systems"

2. Sanjay Sharma: "Communication Systems (Analog and Digital) "

شكراً لكم