Computer Applications 4

Lecture-01

Introduction to CAD/CAM

Dr. Dhafer Manea Hachim AL-HASNAWI
Assist Proof
Al-Furat Al-Awsat Technical University
Engineering Technical College / Najaf
email:coj.dfr@atu.edu.iq

Outlines

- Introduction to CAD/CAM
- Introduction to MASTERCAM
- 2D CAD using MASTERCAM
- Tool Path Planning in MASTERCAM
- Tool Path Optimization

Objectives

- To understand the need for CAD/CAM in Lean Manufacturing.
- To be able to create 2D Geometries in MASTERCAM
- To be able to create 2D toolpaths in MASTERCAM
- To use MASTERCAM for identifying optimum toolpaths
- To generate NC codes using MASTERCAM

CAD/CAM

- Computer-aided design (CAD) is the use of computer systems to assist in the creation, modification, analysis, or optimization of a design.

- Computer-aided manufacturing (CAM) is the use of computer systems to plan, manage, and control the operations of a manufacturing plant through direct or indirect computer interface with plant’s resources.

Need for CAD/CAM

- To increase productivity of the designer
- To improve quality of the design
- To improve communications
- To create a manufacturing database
- To create and test toolpaths and optimize them
- To help in production scheduling and MRP models
- To have effective shop floor control

How do CAD/CAM systems work?

- Developing NC code requires an understanding of:
  1. Part geometry
  2. Tooling
  3. Process plans
  4. Tolerances
  5. Fixtures
- Most CAD/CAM systems provide access to:
  1. Part geometry
  2. Tooling

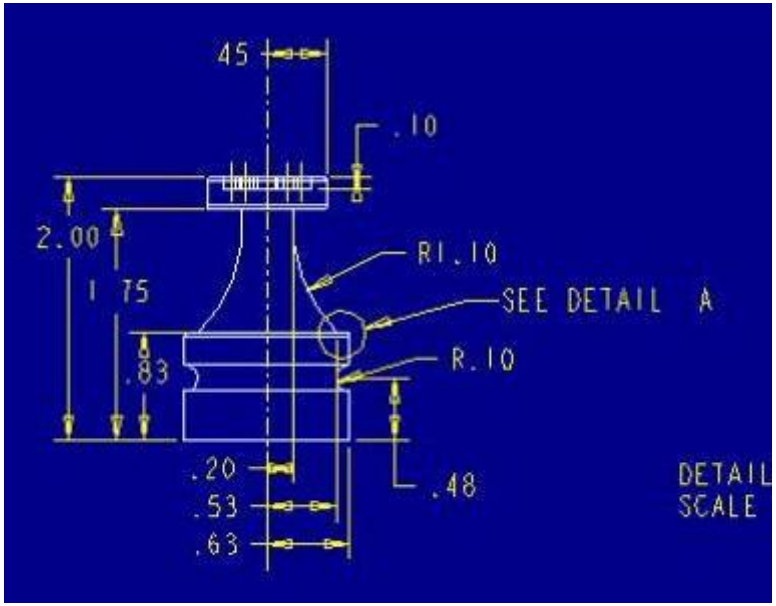

Instructions can be generated for a generic NC machine

- A set of tool paths and positions can be automatically generated
- These paths can be edited and modified
- These paths and instructions can then be “posted” to a specific machine

The Design Process : Then and Now

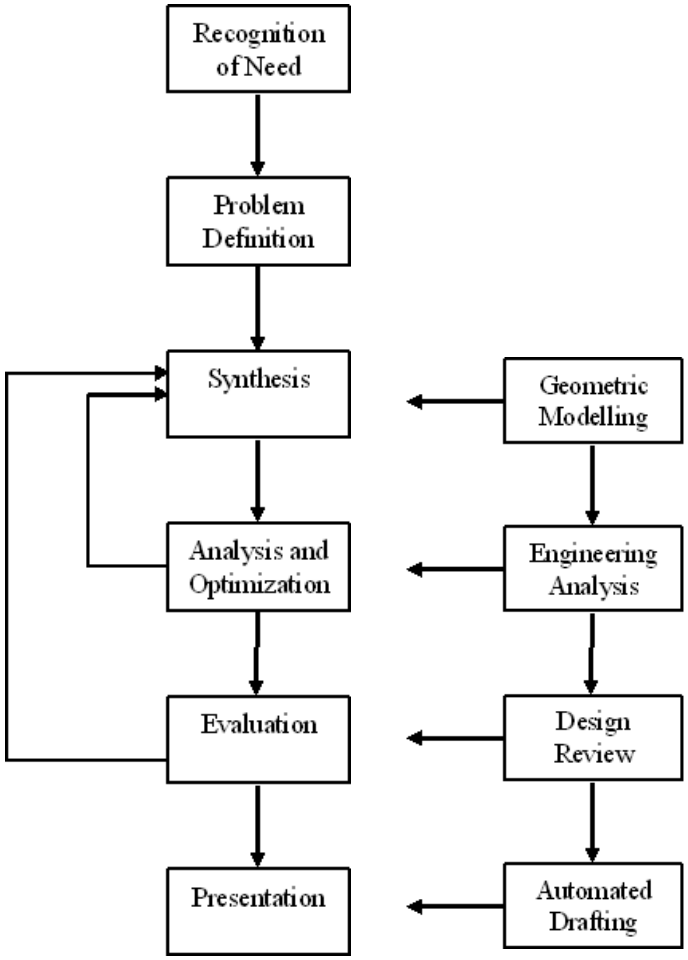

Before CAD **After CAD**

CAD/CAM and the new Environment

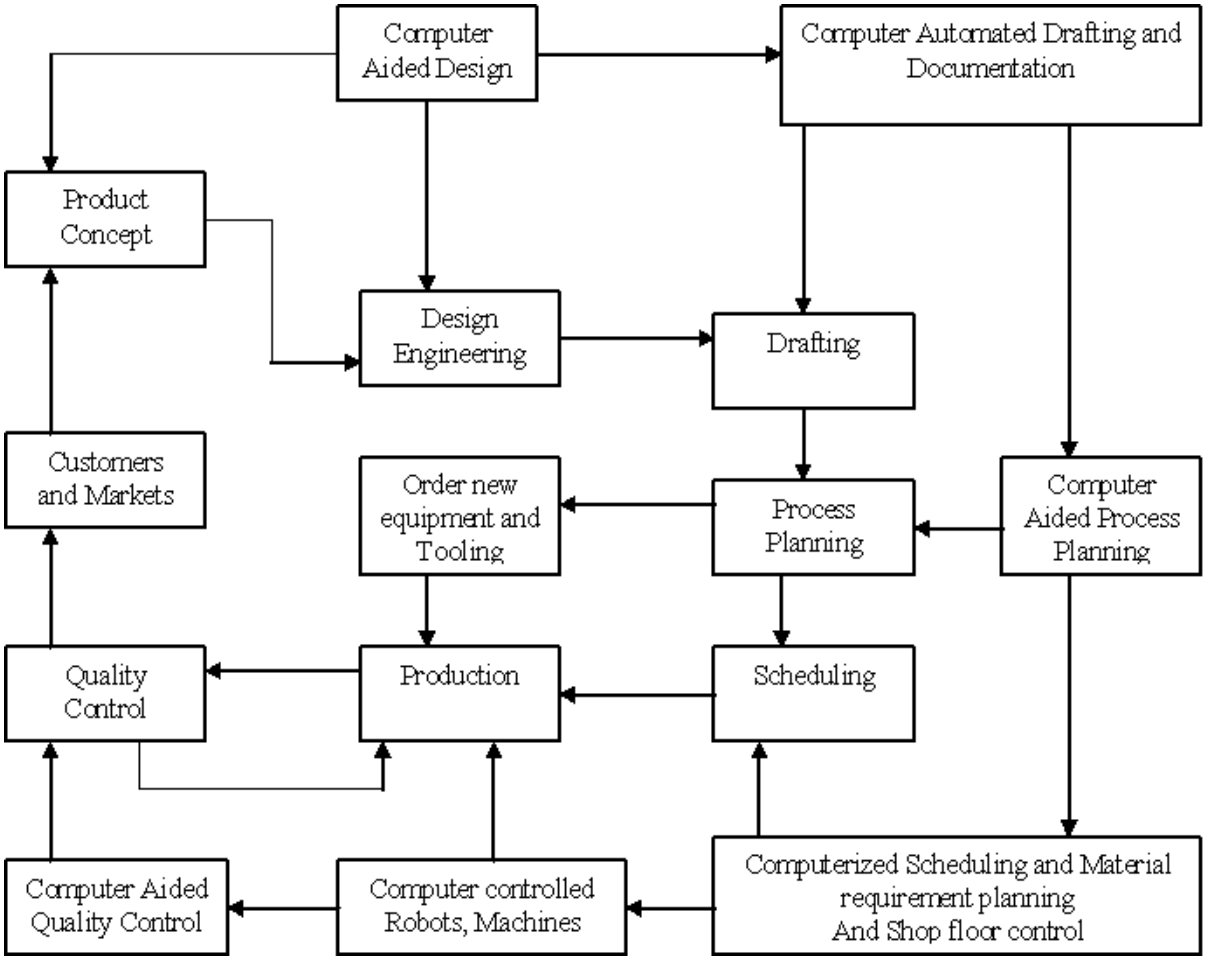

Exercise (3-5 mins)

- Discuss how CAD/CAM helps in Lean Manufacturing? Elaborate on any one aspect.
- What advantages does CAD/CAM approach offer in NC Programming?

CAD/CAM Support

- AutoCAD 200i
- Pro Engineer 2001
- MasterCAM

What do I need to begin MasterCAM?

- Part geometry
  - Draw or import
- Tooling
  - Library or create
- Process plans
- Fixtures
  - Define orientation and location

MasterCAM

- Mastercam is a three-dimensional geometry creation engine along with features to aid in tool path generation and verification.

  MasterCAM allows tool path planning and NC code generation for a given part. This part can either be drawn in MasterCAM or imported from other CAD packages

MasterCAM Drawing

- Geometrical part drawing
  - In-built CAD package
    - Two-dimensional parts
    - Three-dimensional parts
  - Translators (include)
    - IGES (international Graphics Exchange Standard)
    - DXF (AutoCad)
    - CADL (CADKey)

Tool Path Generation using MasterCAM

- Tool path generation
  - Extensive Tool library
  - Machining parameter selection
  - NC program generator
  - Animation to visualize machining operations

Exercise (individual)

- Is it always good to use a CAD/CAM package? Why?
- What are the advantages of using a CAD/CAM system?

Exercise (Group)

- Develop a set of rules as to when to use a CAD/CAM system.
- Create an economic model that can be used to justify using MasterCAM or a similar system.

Getting Started with 2D Drawing

- Create simple 2D Geometries using basic shapes say a Rectangle

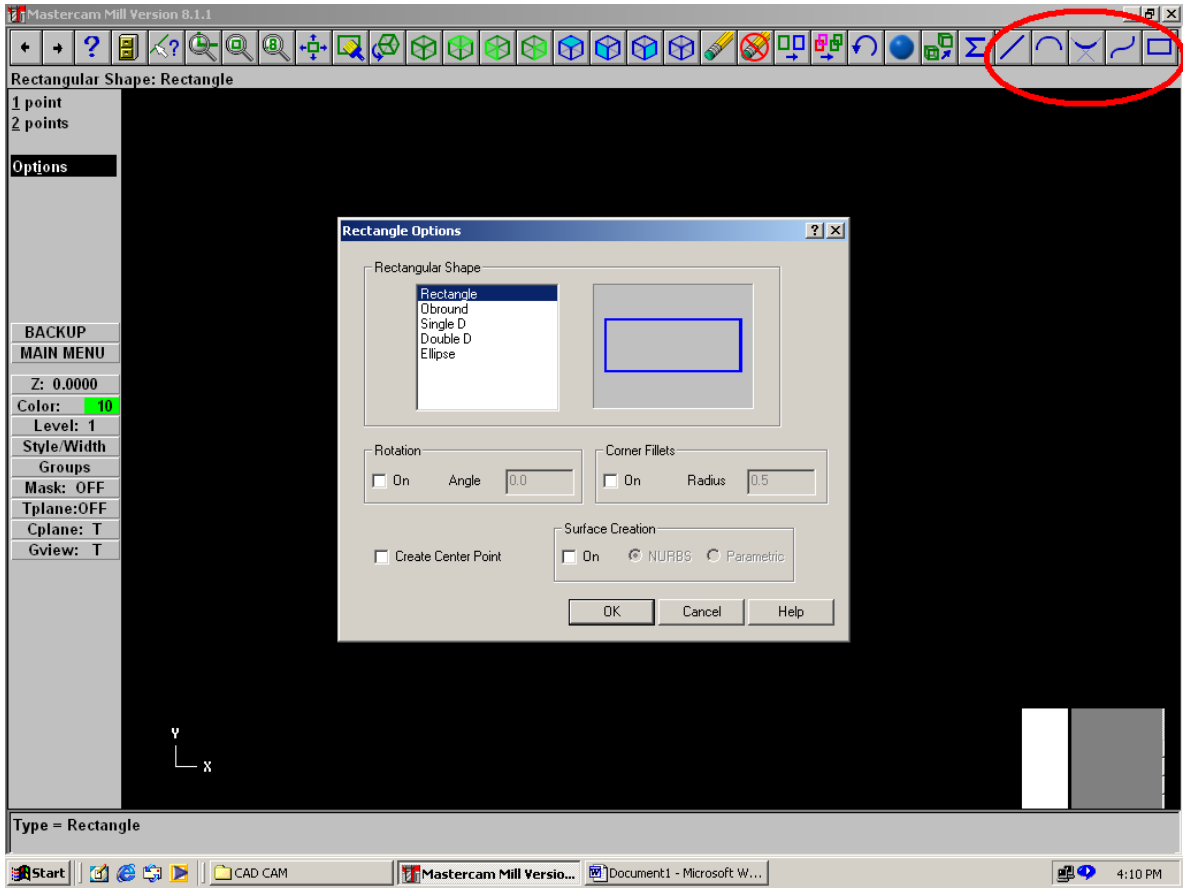

Building 2D Geometry

- Place and Dimension the Shape

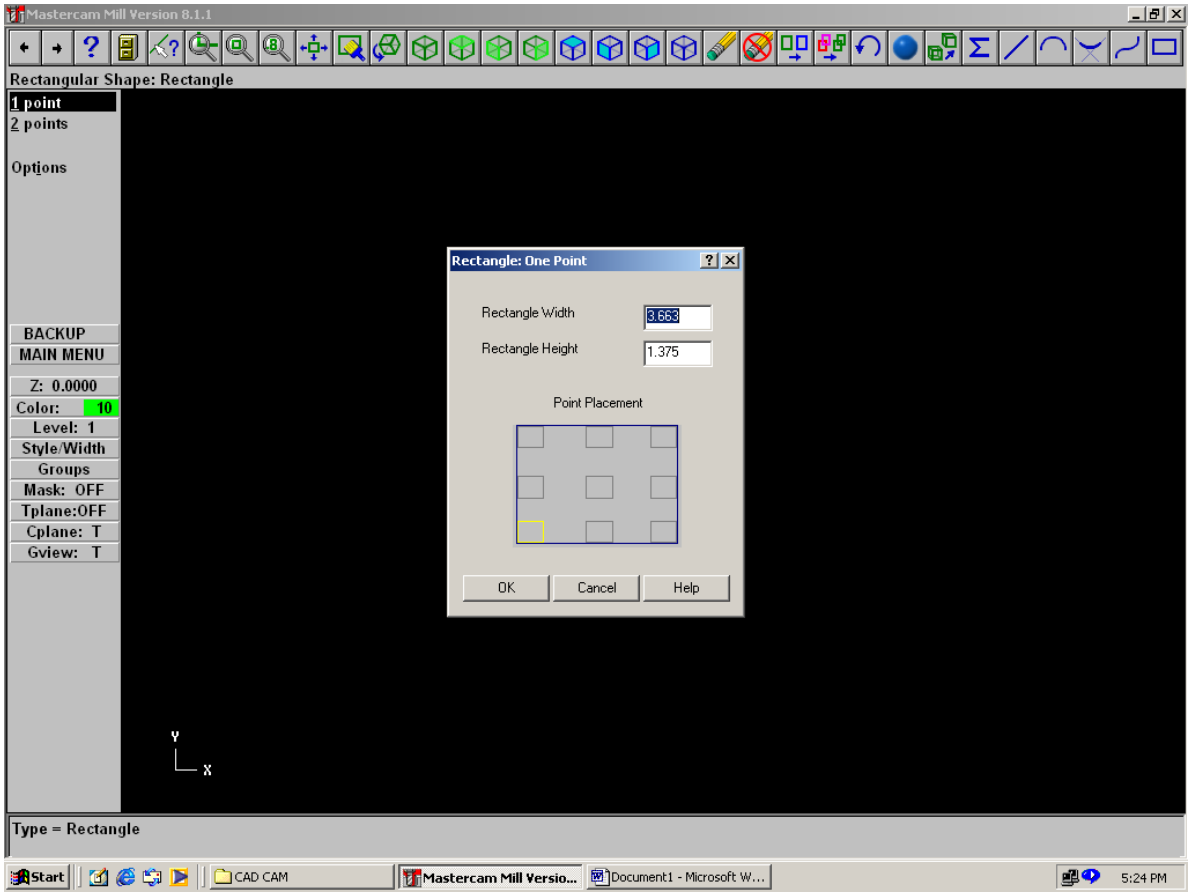

Creating Shape with Lines and Rectangles

- Complete the Basic profile. We will now add arcs, fillets and trim entities

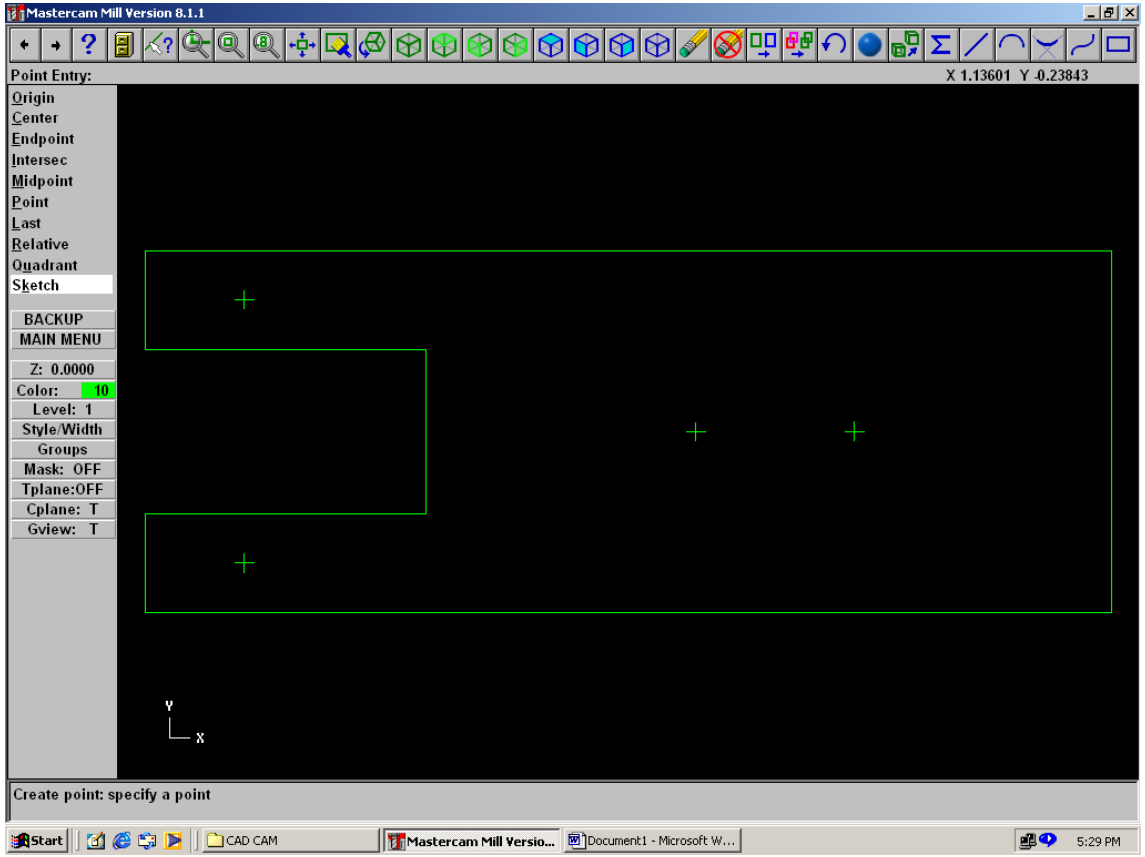

Adding Arcs, Radius and Fillets

- Click on Main Menu [Create- Arc-pt dia cir] on to dimension and place arcs/circles
- Click on Main Menu [Create-Fillets] to create Fillets. Dimension them Suitably.

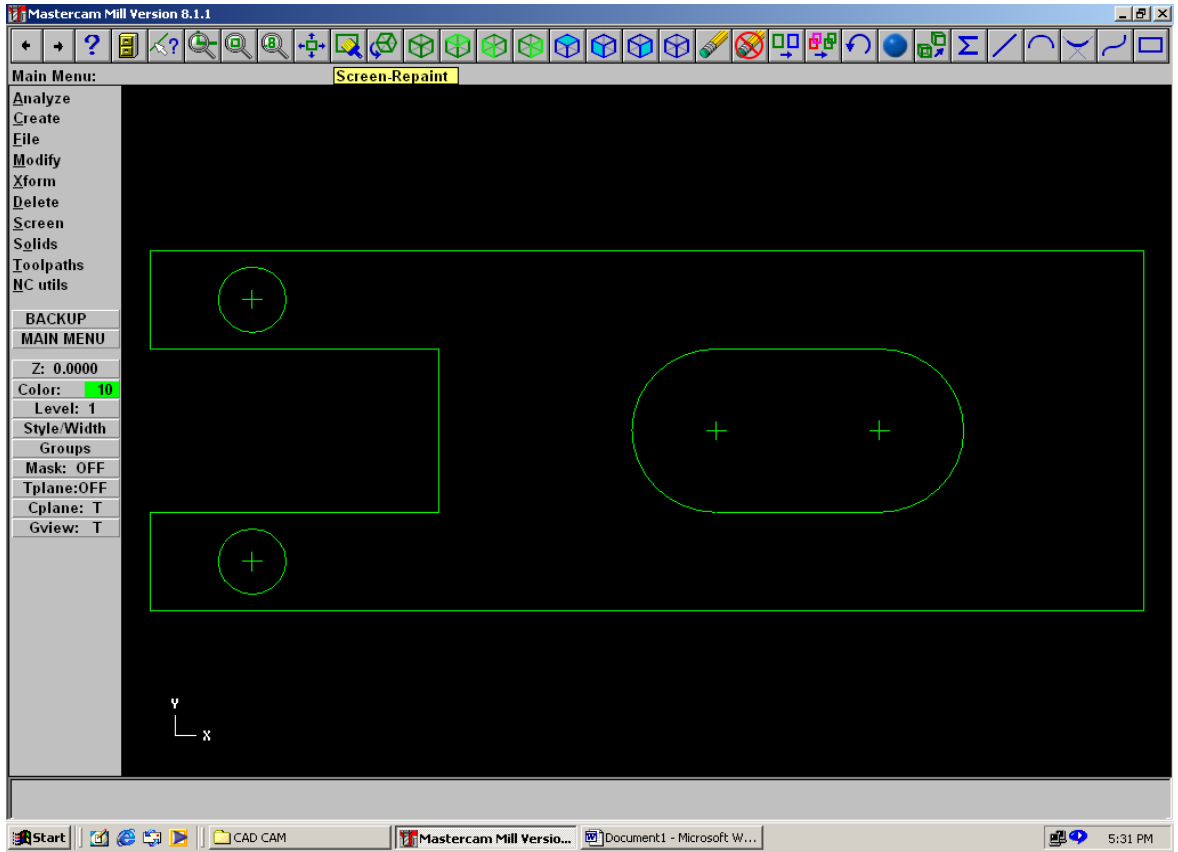

Completing our Mock Profile

- To Trim or Cut entities Main Menu [Modify-Trim-2 Entities] to get required profile.

Don’t forget to Save your file

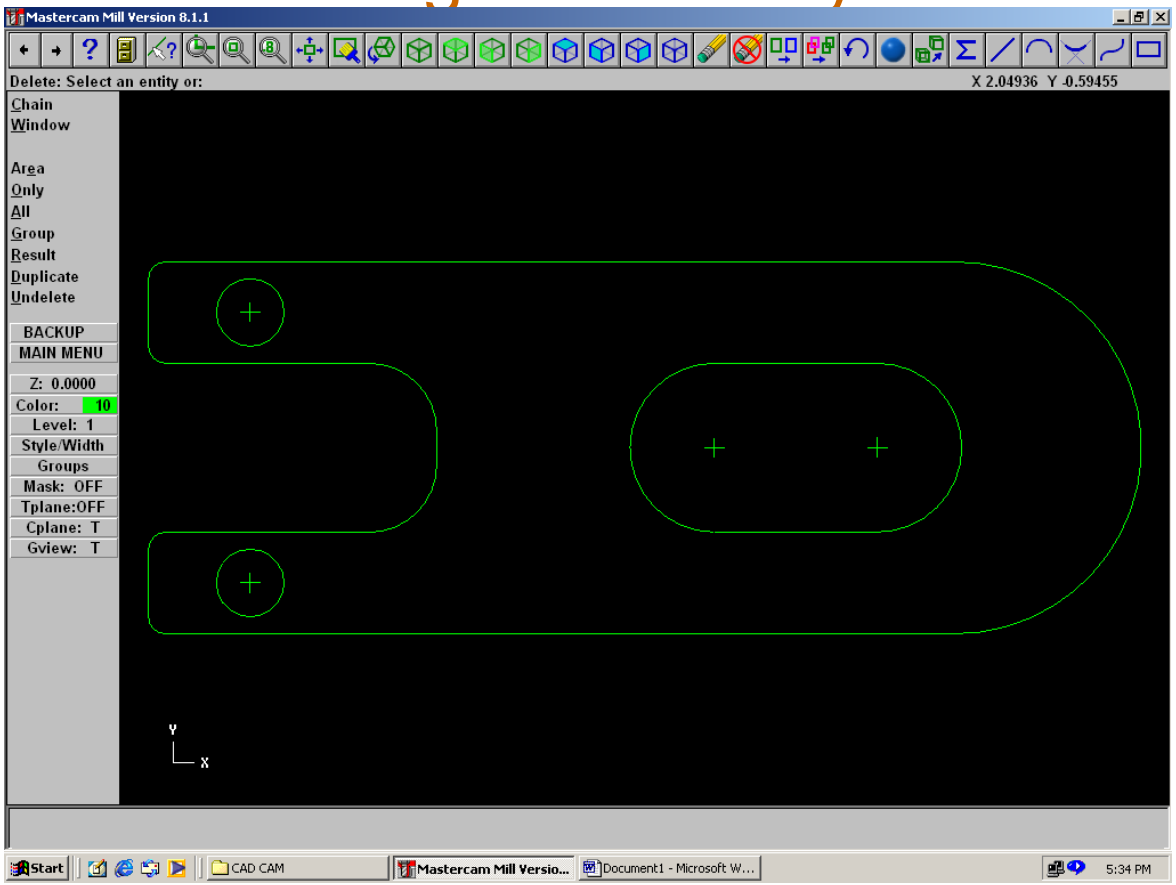

Getting started with Toolpaths

- Click on Main Menu [Toolpaths]. MasterCAM lists the different machining operations

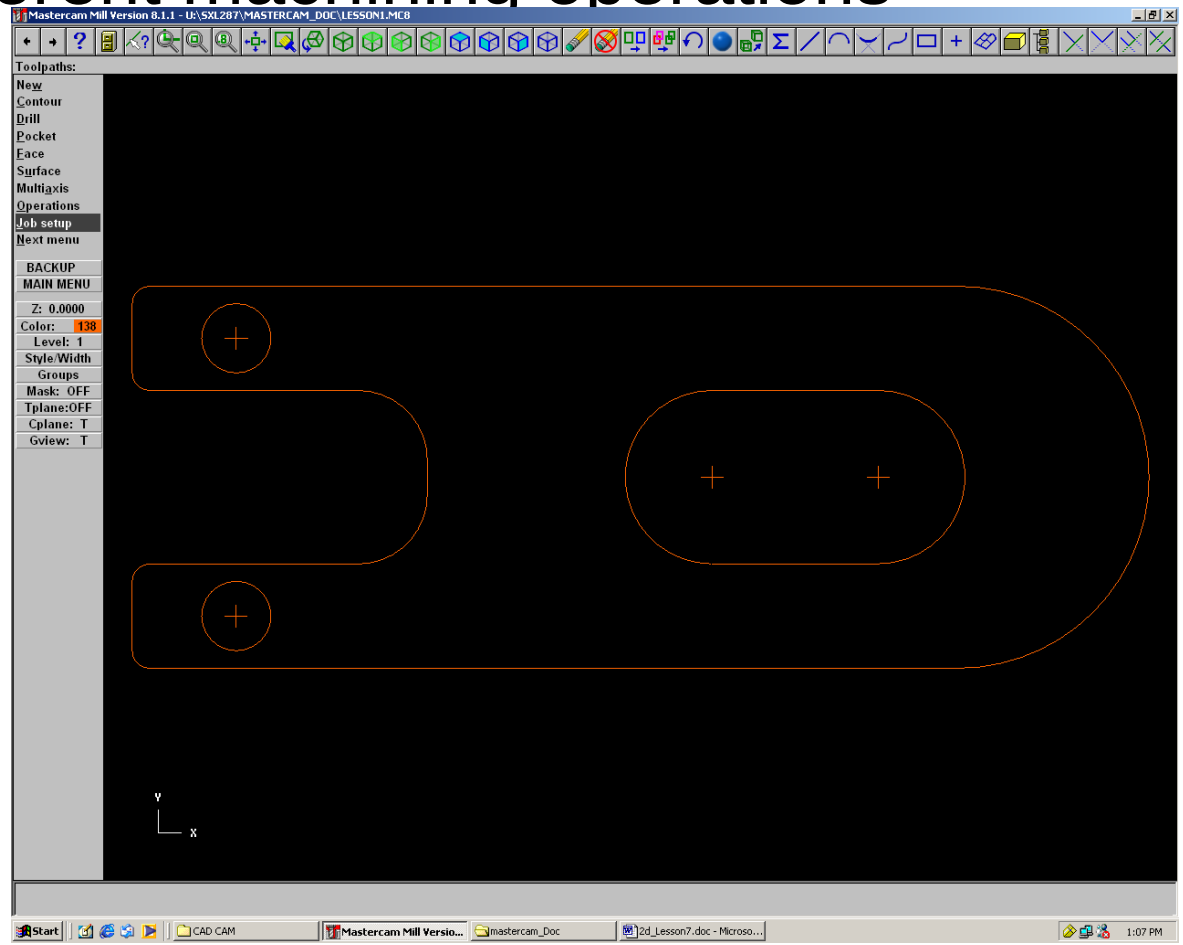

Contouring Options

- By Selecting Contour the various Contouring Options are listed. Select Chain and the geometry chains up and shows tool travel direction

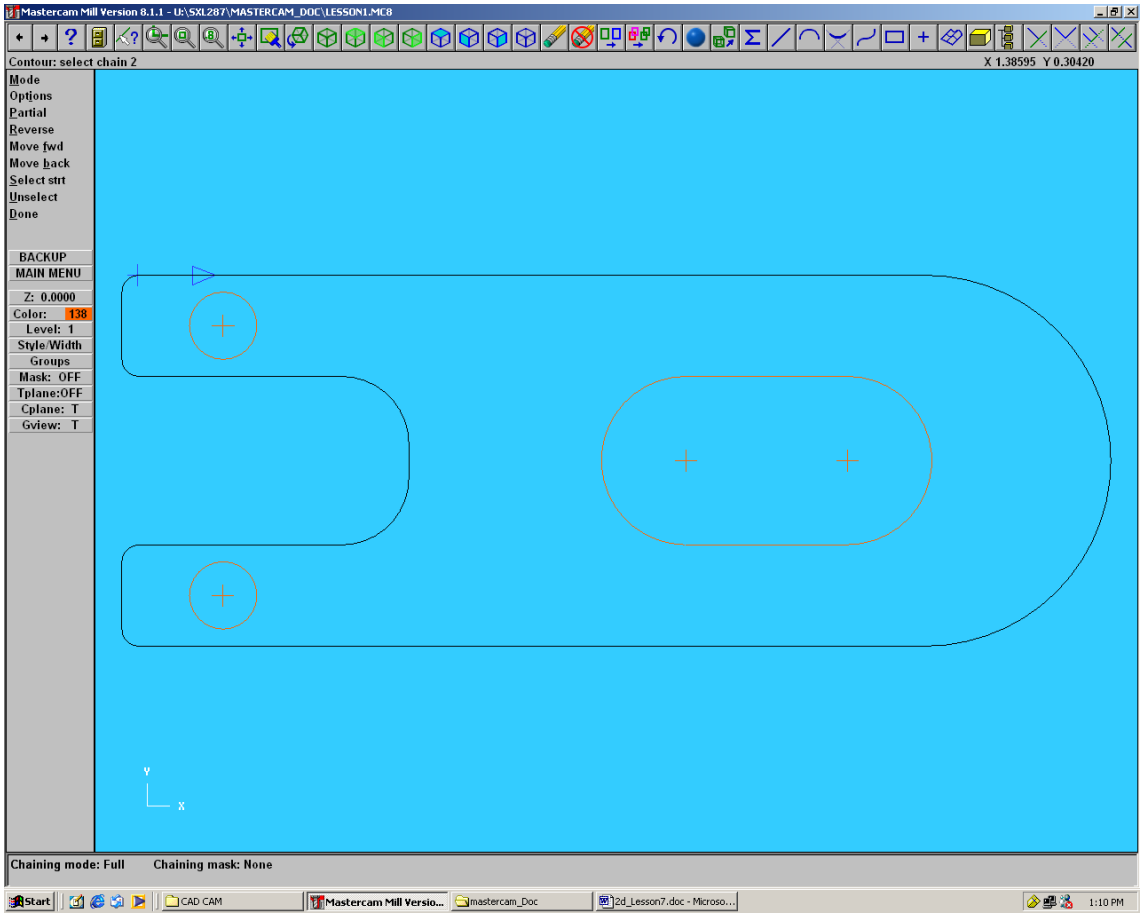

Defining Tool Parameters

- Select the Contour type and Tool Parameters Window pops up. Feed the Right Parameters and Right Click to Select Specific Tools.

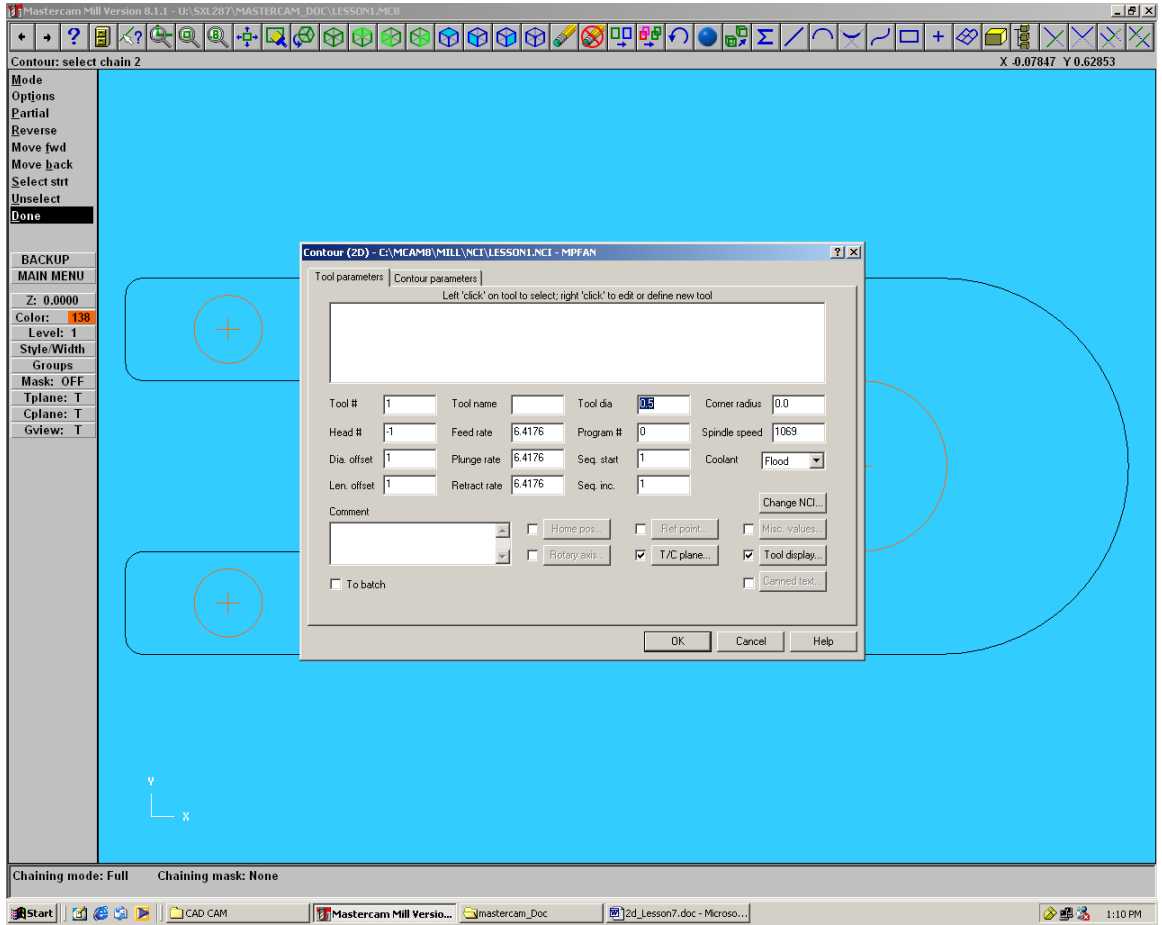

Selecting the Tools

- MasterCAM has a whole range of tools in a tool library from which tool selections can be made. Now feed the correct parameters.
- You can also specify your own tools.

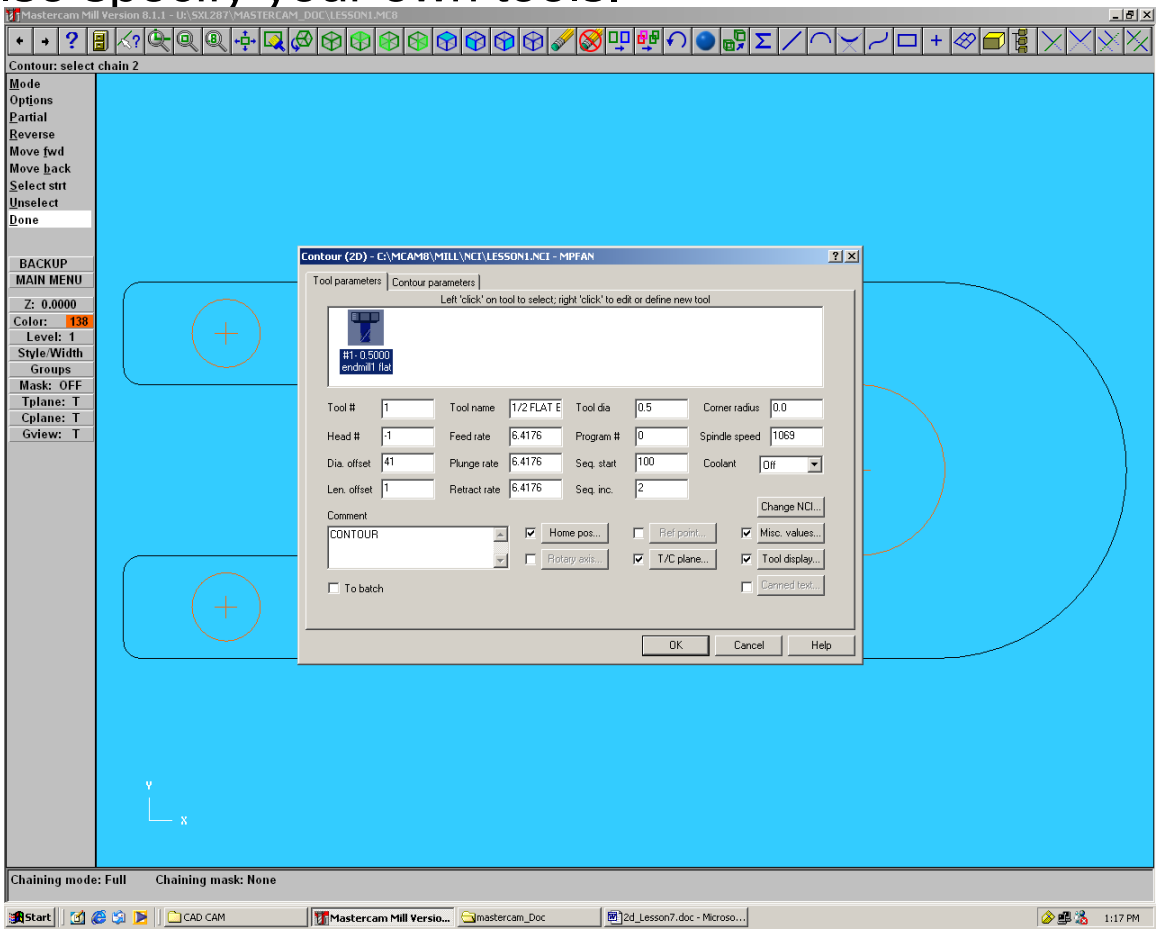

Displaying Toolpaths

- Once both the Tool parameters and Contour Parameters have been Correctly defined. Click Ok to display the Toolpath.

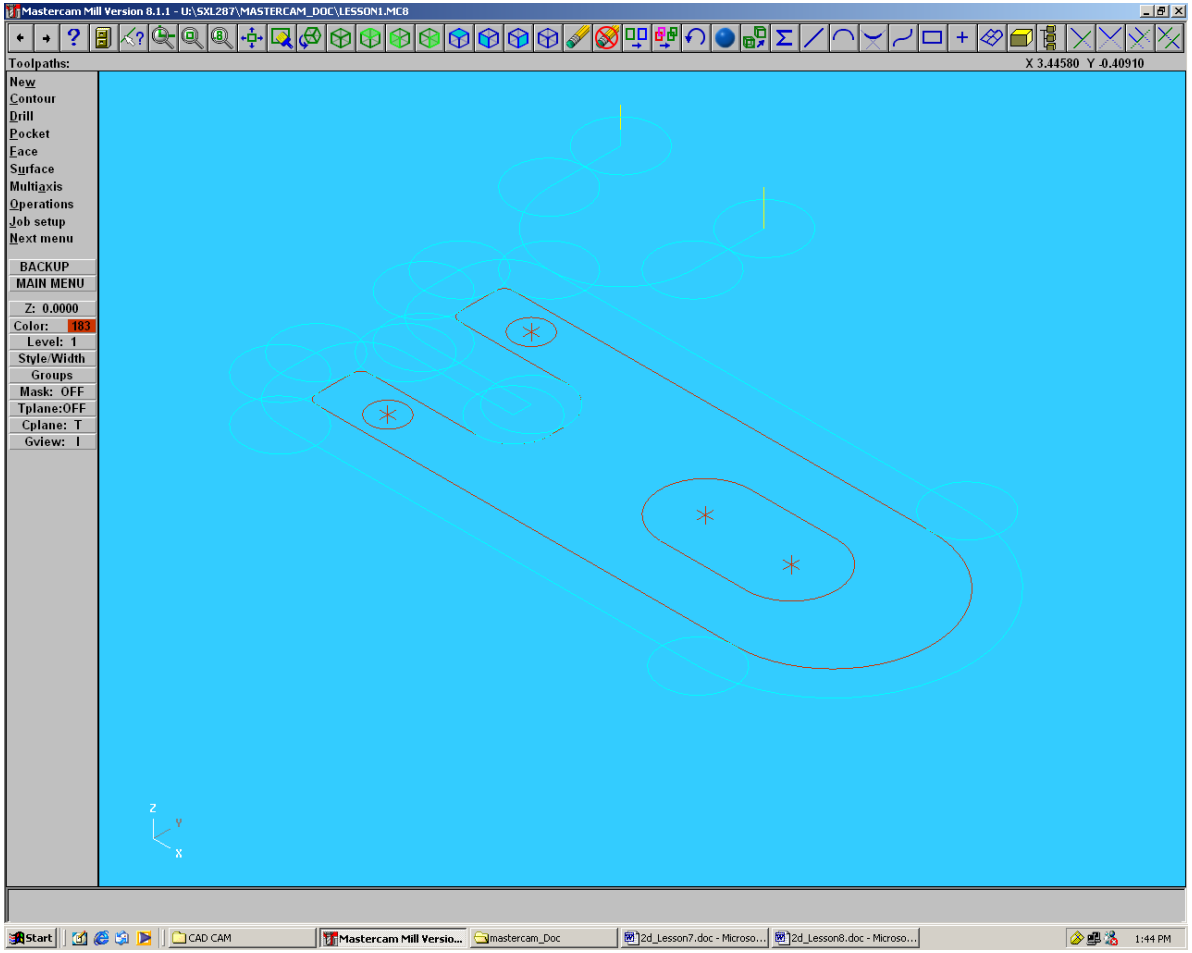

Toolpath Optimization?

- MASTERCAM does NOT give a minimum time Toolpath. It gives the toolpath that has been selected.

Exercise :

Try out different toolpaths from the toolpaths pallete for the part in the tutorial. Which one is optimal? Why?