Lecture-10
Step-by-Step Lesson

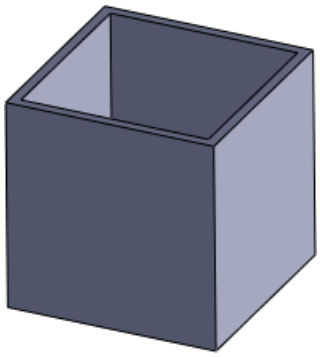

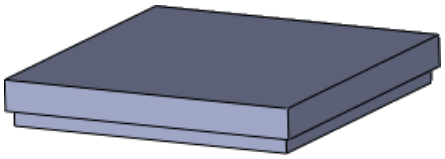

This chapter includes the following topics:

- **Getting Ready for the Lesson**
- **Creating a Box**
- **Creating a Lid for the Box**
- **Putting the Box and Lid Together**
- **Creating a Drawing**

Getting Ready for the Lesson

Before you begin this lesson, it is helpful to know how to access the SOLIDWORKS software's tools.

Many of the tools you use are accessible in three ways:

- Menus
- Toolbars
- CommandManager

These tools are context sensitive, which means that menu items are grayed out if the tools are not available for your current task. Sometimes, the tools do not appear at all, so it is helpful to know which toolbar you use to access them.

For more information, see *Menus* in the Help.

The following table lists the tools you use in the lesson and their locations on menus, toolbars, and the CommandManager.

Tool	Icon	Menu	Toolbar	CommandManager
New		**File** > **New**	Standard	Menu Bar
Save		**File** > **Save**	Standard	Menu Bar
Options		**Tools** > **Options**	Standard	Menu Bar
Sketch		**Insert** > **Sketch**	Sketch	Sketch
Smart Dimension		**Tools** > **Dimensions** > **Smart**	Sketch	Sketch
Rectangle		**Tools** > **Sketch Entities** > **Rectangle**	Sketch	Sketch
Extruded Boss/Base		**Insert** > **Boss/Base** > **Extrude**	Features	Features
Shell		**Insert** > **Features** > **Shell**	Features	Features
Insert Components		**Insert** > **Component** > **Existing Part/Assembly**	Assembly	Assembly
Mate		**Insert** > **Mate**	Assembly	Assembly

Creating a Box

The first part you create is a box.

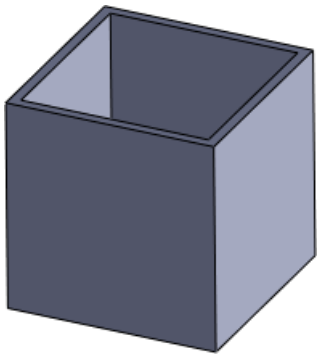

Opening a New Part

A part is the basic building block in the SOLIDWORKS software. In this procedure, you open a new part document where you will build a model.

1. Click **New** (Standard toolbar) or **File** > **New**.
2. In the New SOLIDWORKS Document dialog box, click **Part** and click **OK**.
   A new part document opens.

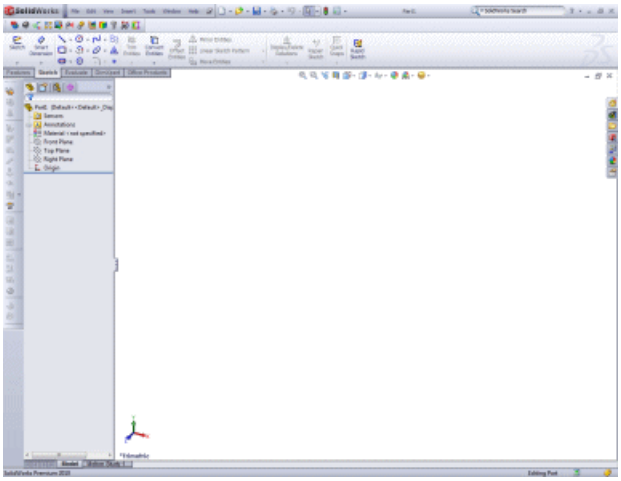

Setting the Drafting Standard and Units

Before you begin modeling, you set the drafting standard and unit of measurement for the part.

1. Click **Options** (Standard Toolbar) or **Tools** > **Options**.
2. In the System Options - General dialog box, select the Document Properties tab.
3. In **Overall drafting standard**, select **ISO**.
4. On the left pane, click **Units**.

5. Under **Unit system**, select **MMGS** to set the unit of measurement to millimeter, gram, second.
6. Click **OK**.

Sketching a Rectangle

You use a sketch to construct the basic outline of the part. The sketch is in 2D. Later, when you extrude the sketch, it becomes a 3D model.

1. Click **Corner Rectangle** (Sketch toolbar) or **Tools** > **Sketch Entities** > **Rectangle**.
   - The software enters sketch mode.
   - The **Front**, **Top**, and **Right** planes are visible.
   - The PropertyManager opens at the left and prompts you to select a plane on which to sketch the rectangle.
   - The pointer changes to to indicate that you can select a plane.

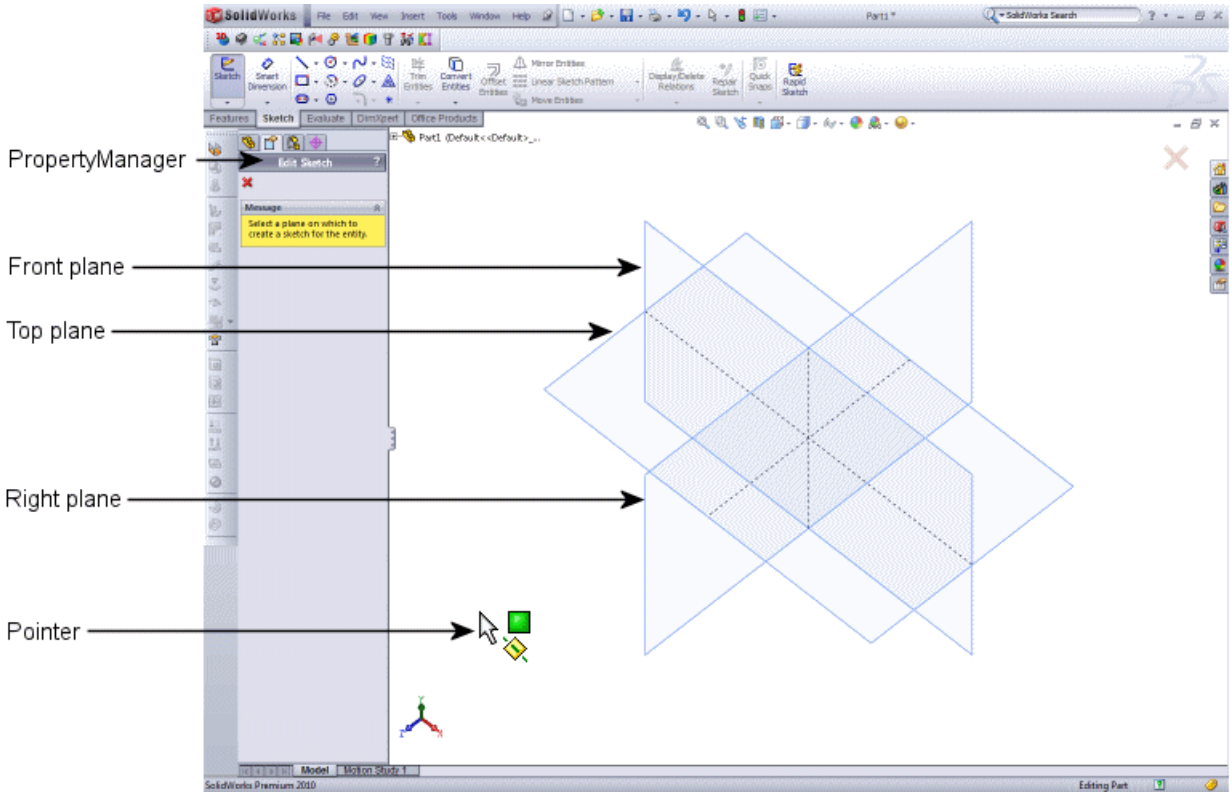

2. Click the **Front** plane.

   The pointer changes to to indicate that you can now draw the rectangle.

3. Starting anywhere, click, then drag the pointer to create a rectangle.
4. Click to complete the rectangle. It does not matter what size you make the rectangle; you can dimension it later.

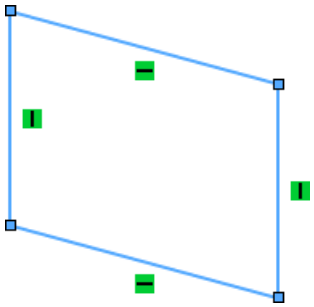

You may see four symbols: ▮ ▬ ▮ ▬. These symbols are called sketch relations. In the rectangular sketch, they indicate where lines are vertical ▮ and horizontal ▬.

> The current view is isometric, which makes the rectangle appear skewed. To see the rectangle normal to (straight on), press the spacebar. In the Orientation dialog box, double-click **Normal To**.

Instead of exiting sketch mode, you keep the sketch open so you can dimension the rectangle in the next set of steps.

Dimensioning the Sketch

Now that you have a sketched rectangle, you need to dimension it by adding measurements. You can use the **Smart Dimension** tool to dimension the rectangle. If you had exited sketch mode in the previous procedure, you would have to re-enter sketch mode to dimension the sketch.

1. Click **Smart Dimension** (Dimensions/Relations toolbar) or **Tools** > **Dimensions** > **Smart**.

   The pointer changes to  .
2. Select the top horizontal line in the rectangle.

   A dimension appears.
3. Drag the dimension up and click to place it.
4. In the Modify dialog box, type `100` and click ✓.

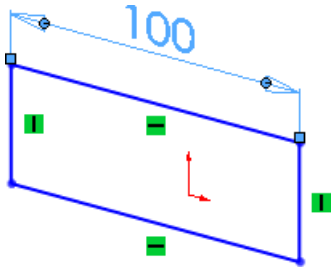

5. Repeat steps 2 through 4 for the right vertical line in the rectangle.

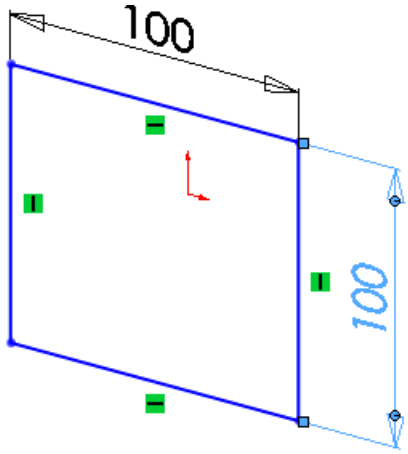

6. In the upper right corner of the window in the Confirmation Corner, click the sketch icon  exit sketch mode.

Extruding the Sketch

After dimensioning the 2D sketch, you can extrude it to make a 3D solid model.

1. Click **Extruded Boss/Base**  (Features toolbar) or **Insert** > **Boss/Base** > **Extrude**.
   - If the sketch is selected, the Boss-Extrude PropertyManager appears and a preview of the extrude appears.
   - If the sketch is not selected, the Extrude PropertyManager appears and indicates that you need to select a sketch.
2. If the Extrude PropertyManager appears, select the sketch by clicking any line in the square. Otherwise, go to the next step.

   A preview of the extrude appears.

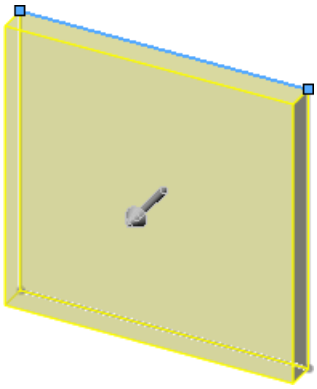

3. In the PropertyManager:

   a) Set **Depth** to `100`.

   b) Click .

   The 2D sketch changes to a 3D model.

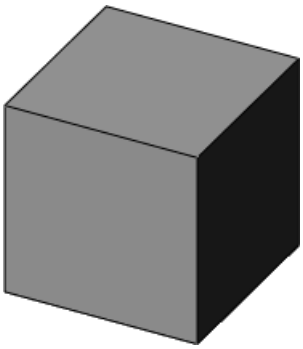

Creating a Hollow Model

In this procedure, you use the **Shell** tool to create a hollow box.

1. Click **Shell** (Features toolbar) or **Insert** > **Features** > **Shell**.
2. In the Shell PropertyManager, under **Parameters**, set **Thickness** to `5`.
3. In the graphics area, select the face as shown:

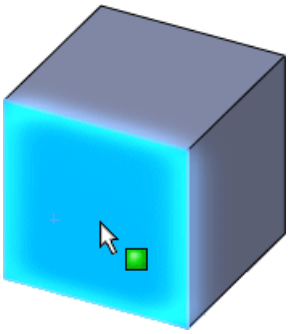

Face<1> appears in the PropertyManager under **Faces to Remove** .

4. Click .
   The box is hollow with walls that are 5mm thick.

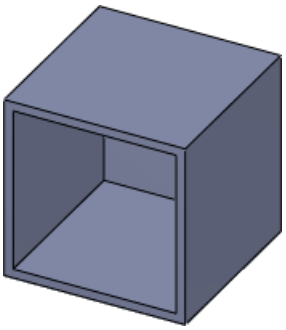

The box is complete.

Saving the Part

1. Click **Save** (Standard toolbar) or **File** > **Save**.
2. In the Save As dialog box:
   a) Browse to the location where you want to save the document.
   b) For **File name**, type `box`.
   c) Click **Save**.
   The part is saved as `box.sldprt`.
3. Keep the part open.

Creating a Lid for the Box

You created the first part, a box. Now you need to create a second part to make a lid for the box.

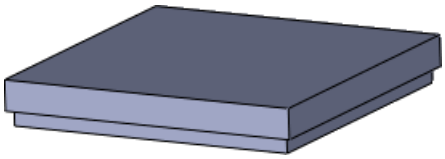

Opening a New Part

1. Click **New** (Standard toolbar) or **File** > **New**.
2. In the New SOLIDWORKS Document dialog box, click **Part** and click **OK**.
   A new part document opens.