AL FURAT AL AWSAT TECHNICAL UNIVERSITY

NAJAF COLLEGE OF TECHNOLOGY

DEPARTMENT OF TECHNICAL COMMUNICATIONS ENGINEERIN

PC MAINTENANCE

3rd CLASS

2016/2017

Lecture#4

Lecturer

HAYDER S. RASHID

1- Types and Characteristics of Processors

The processor installed on a motherboard is the primary component that determines the computing power of the system (see Figure 1). Recall that the two major manufacturers of processors are Intel *(www.intel.com)* and AMD *(www.amd.com).*

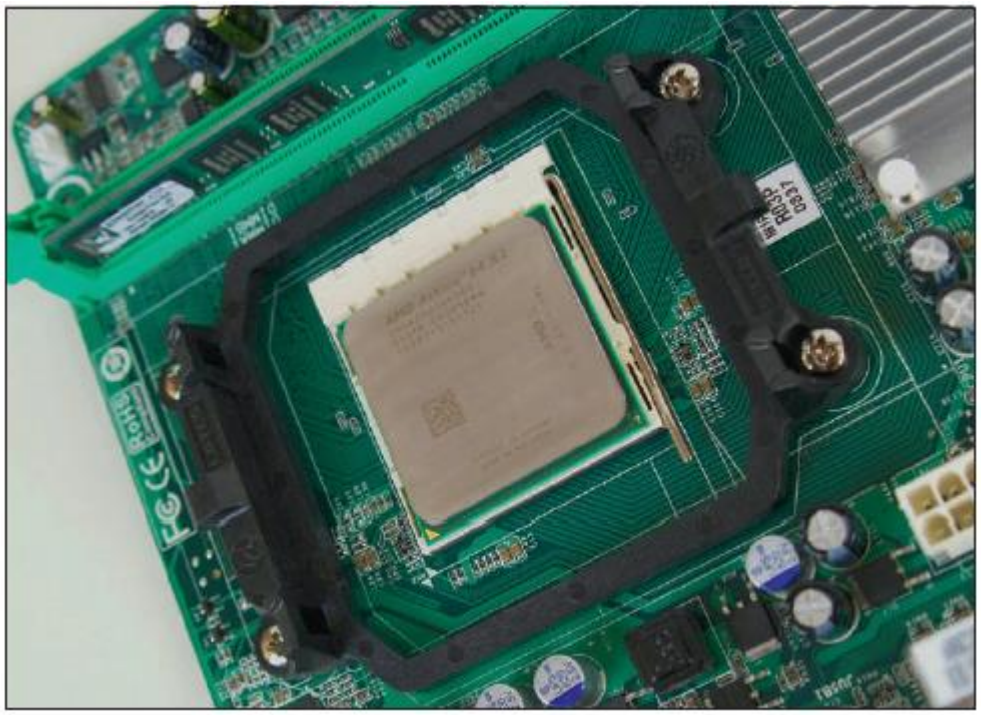

Figure (1) An AMD Athlon 64 X2 installed in socket AM2+ with cooler not yet installed

In this lecture, you learn a lot of details about processors. As you do, try to keep these nine features of processors at the forefront. These features affect performance and compatibility with motherboards:

Feature 1: Processor speed. The **processor frequency** is the speed at which the processor operates internally and is measured in gigahertz, such as 3.3 GHz. Current Intel and AMD processors run at 1.8 GHz up to more than 4.4 GHz.

Feature 2: Socket and chipset the processor can use. Recall that important Intel sockets for desktop systems are the LGA1150, LGA1155, LGA1156, LGA2011, LGA1366, and LGA775. AMD's important desktop sockets are AM3+, AM3, AM2+, AM2, FM1, FM2+, and FM2 sockets.

Feature 3: Processor architecture (32 bits or 64 bits). All desktop and laptop processors sold today from either Intel or AMD are hybrid processors, which can process 64 bits or 32 bits at a time. A hybrid processor can use a 32-bit operating

system (OS) or a 64-bit OS. Windows 8 and most editions of Windows 7 come in either type.

Feature 4: Multiprocessing abilities. The ability of a system to do more than one thing at a time is accomplished by several means:

- ***Multiprocessing***. Two processing units (called arithmetic logic units or ALUs) installed within a single processor is called **multiprocessing**. The Pentium was the first processor that contained two ALUs, which means the processor can execute two instructions at the same time.
- ***Multithreading.*** Each processor or core processes two threads at the same time. When Windows hands off a task to the CPU, it is called a **thread** and might involve several instructions. To handle two threads, the processor requires extra registers, or holding areas, within the processor housing that it uses to switch between threads. In effect, you have two logical processors for each physical processor or core. Intel calls this technology **Hyper-Threading** and AMD calls it **HyperTransport**. The feature must be enabled in UEFI/BIOS setup and the operating system must support the technology.
- ***Multicore processing***. Multiple processors can be installed in the same processor housing (called **multicore processing**). A processor package might contain up to eight cores (dual-core, triple-core, quad-core, and so forth). In Figure (2), this quad-core processor contains four cores or CPUs. Using multithreading, each core can handle two threads. Therefore, the processor appears to have up to eight logical processors as it can handle eight threads from the operating system.

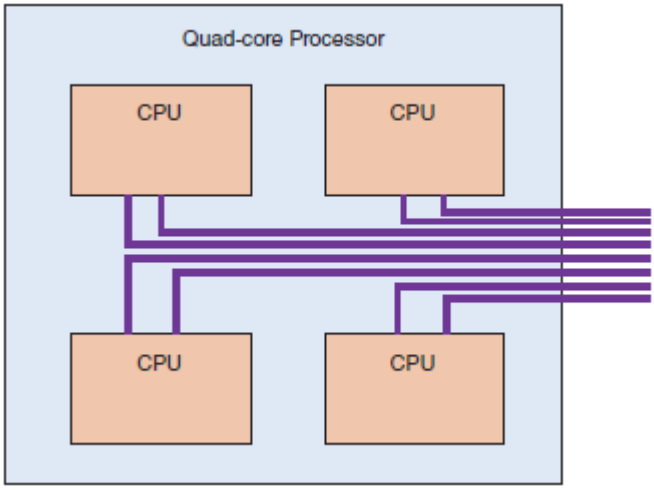

Figure (2) This quad-core processor has four cores and each core can handle two threads

- ***Dual processors***. A server motherboard might have two processor sockets, called **dual processors** or a **multiprocessor platform** (see Figure 3). A processor (for example, the Xeon processor for servers) must support this feature.

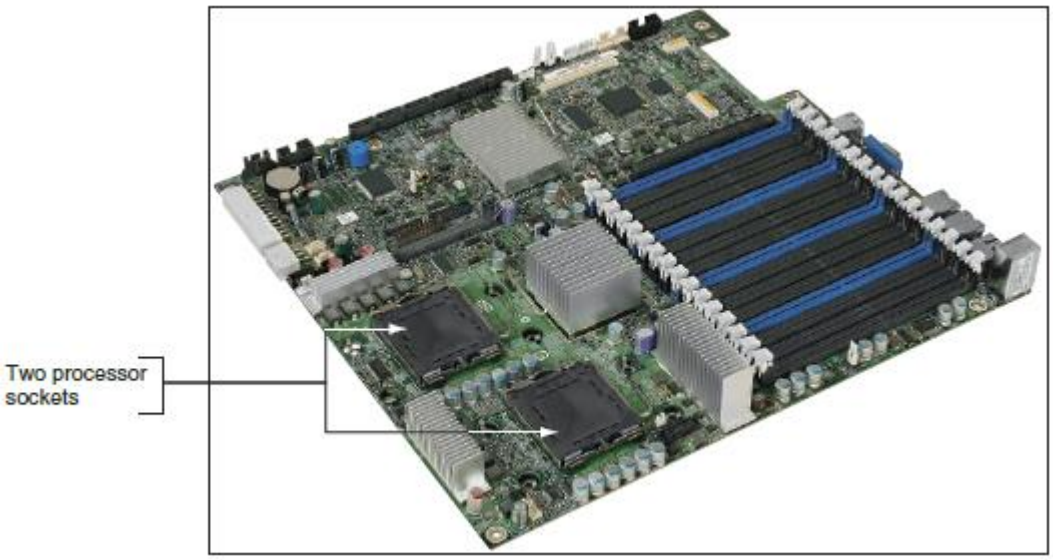

Figure (3) This motherboard for a server has two processor sockets, which allow for a multiprocessor platform

Feature 5: Memory cache, which is the amount of memory included within the processor package. Today's processors all have some memory on the processor chip (called a die). Memory on the processor die is called **Level 1 cache (L1 cache)**. Memory in the processor package, but not on the processor die, is called **Level 2 cache (L2 cache)**. Some processors use a third cache farther from the processor core, but still in the processor package, which is called **Level 3 cache (L3 cache)**. Memory used in a memory cache is **static RAM** (**SRAM**; pronounced "S-Ram"). Memory used on the motherboard loses data rapidly and must be refreshed often. It is, therefore, called volatile memory or **dynamic RAM** (**DRAM**; pronounced "D-Ram"). SRAM is faster than DRAM because it doesn't need refreshing; it can hold its data as long as power is available.

Feature 6: Security. **Execute Disable Bit (EDB)** (also called eXecute Disable [XD] by Intel, Enhanced Virus Protection by AMD, and disable execute bit by CompTIA) is security built into a processor so that it can work with the operating system to designate an area of memory for holding data or instructions. When an area is designated for data, instructions stored in this area are not executed, thus preventing a **buffer overflow attack** by malicious software, which attempts to run its code from an area of memory assigned to another program for its data.

EDB requires a compatible OS. You can enable EDB using the BIOS or UEFI setup screen (see Figure 4). It is important to remember that even though EDB can stop malware from executing, it cannot remove it. You still need to use anti-malware software to remove the malware.

Figure (4) The Execute Disable Bit is enabled using the UEFI setup screen

Feature 7: The memory features on the motherboard that the processor can support. DRAM memory modules that might be used on a motherboard include DDR, DDR2, DDR3, or DDR4. Besides the type of memory, a processor can support certain amounts of memory, memory speeds, and number of memory channels (single, dual, triple, or quad channels). All these characteristics of memory will be discussed later.

Feature 8: Support for virtualization. A computer can use software to create and manage multiple virtual machines and their virtual devices. Most processors sold today support virtualization, and the feature must be enabled in UEFI/BIOS setup.

Feature 9: Integrated graphics. A processor might include an integrated GPU. A **graphics processing unit (GPU)** is a processor that manipulates graphic data to form the images on a monitor screen. The GPU might be on a video card, on the motherboard, or embedded in the CPU package. When inside the CPU package, it is called integrated graphics. Many AMD processors and all the Intel second generation and higher processors have integrated graphics.

2- How a Processor Works

Although processors continue to evolve, they all have some common elements. These elements are diagrammed in Figure (5) for the Pentium processor. The Pentium made several major advances in processor technologies when it was first introduced. Because of its historical significance and the foundation it created for today's processors, it's a great place to start when learning how a processor works.

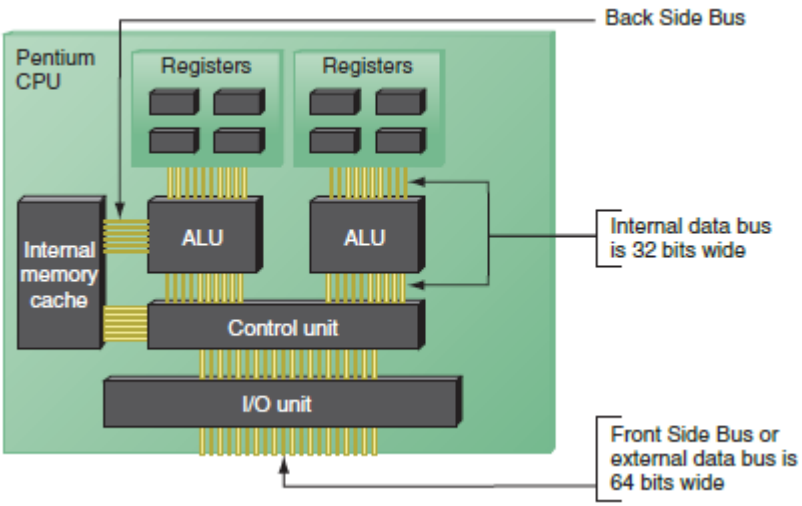

Figure (5) Since the Pentium processor was first released in 1993, the standard has been for a processor core to have two arithmetic logic units so that it can process two instructions at once

A processor contains these basic components diagrammed in Figure (5) for the Pentium processor:

- An input/output (I/O) unit manages data and instructions entering and leaving the processor.
- A control unit manages all activities inside the processor itself.
- One or more arithmetic logic units (ALUs) do all logical comparisons and calculations inside the processor. All desktop and laptop processors sold today contain two ALUs in each processor core within the processor package.
- Registers, which are small holding areas on the processor chip, work much like RAM does outside the processor to hold counters, data, instructions, and addresses that the ALU is currently processing.
- Internal memory caches (L1, L2, and possibly L3 or L4) hold data and instructions waiting to be processed by the ALU.
- Buses inside the processor connect components within the processor housing. These buses run at a much higher frequency than the motherboard

buses that connect the processor to the chipset and memory on the motherboard.

If the processor operates at 3.2 GHz internally and the Front Side Bus is operating at 800 MHz, the processor operates at four times the FSB speed. This factor is called the **multiplier**. Using the UEFI/BIOS setup screens, you can change the multiplier or the clock speed in order to overclock or throttle the processor.

In Figure (5), you can see the internal data bus for the Pentium was only 32 bits wide. More important, however, than the width of the internal bus is the fact that each ALU and register in the early Pentiums could process only 32 bits at a time. All desktop and laptop processors sold today from either Intel or AMD contain ALUs and registers that can process 32 bits or 64 bits at a time. To know which type of operating system to install, you need to be aware of three categories of processors currently used on desktop and laptop computers:

- ***32-bit processors.*** These older processors are known as **x86 processors** because Intel used the number 86 in the model number of these processors. If you are ever called on to install Windows on one of these old Pentium computers, you must use a 32-bit version of Windows. These processors can handle only 32-bit instructions from the OS.
- ***Processors that can process 32 bits or 64 bits.*** These hybrid processors are known as **x86-64 bit processors**. AMD was the first to produce one (the Athlon 64) and called the technology AMD64. Intel followed with a version of its Pentium 4 processors and called the technology Extended Memory 64 Technology (EM64T). Because of their hybrid nature, these processors can handle a 32-bit OS or a 64-bit OS. All desktop or laptop processors made after 2007 are of this type.
- ***64-bit processors.*** Intel makes several 64-bit processors for workstations or servers that use fully implemented 64-bit processing, including the Itanium and Xeon processors. Intel calls the technology IA64, but they are also called x64 processors. They require a 64-bit operating system and can handle 32-bit applications only by simulating 32-bit processing.

Each core in a processor has its own cache and can also share a cache. Figure (6) shows how quad-core processing can work if the processor uses an L3 cache and an internal memory controller. Each core within a processor has its own independent internal L1 and L2 caches. The L1 cache is on the die and the L2 cache is off the die. In addition, all the cores might share an L3 cache within the

processor package. Recall that prior to the memory controller being in the processor package, it was part of the North Bridge chipset. Putting the controller inside the processor package resulted in a significant increase in system performance.

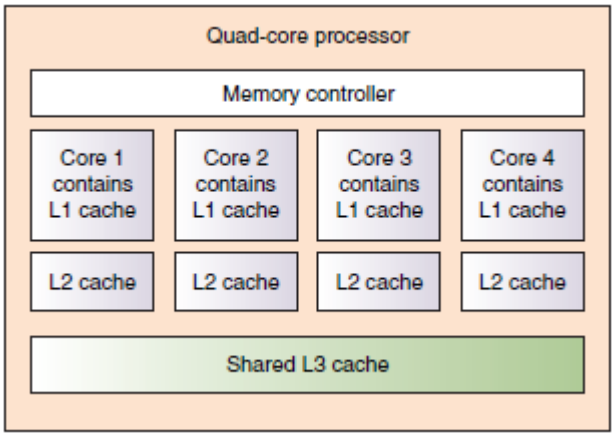

Figure (6) Quad-core processing with L1, L2, and L3 cache and the memory controller within the processor housing

2.1 Intel Processors

Intel's current families of processors for the desktop include the Core, Atom, Celeron, and Pentium families of processors. In addition, Intel groups its processors into Sixth Generation, Fifth Generation, Fourth Generation, Third Generation, Second Generation, and Previous Generation processors. Each generation improves on how the processor and chipset are integrated in the system. Processors in each family are listed in Table (1). Some significant retired processors are also listed. Later in this lecture, you'll learn about the memory technologies mentioned in the table.

Processor	Speed	Description
Fifth-Generation (Broadwell) Processors		
Core i7	Up to 3.8 GHz	6-MB cache, quad core 1333/1600/1866 MHz DDR3 memory Dual-channel memory
Core i5	Up to 3.6 GHz	4-MB cache, quad core 1333/1600/1866 MHz DDR3 memory Dual-channel memory

Table (1) Current intel processors (continues)

Processor	Speed	Description
Fourth-Generation (Haswell) Processors		
Core i7	Up to 4.4 GHz	8-MB cache, quad core 1333/1600 MHz DDR3 memory Dual-channel memory
Core i5	Up to 3.6 GHz	4- to 6-MB cache, quad or dual core 1333/1600 MHz DDR3 memory Dual-channel memory
Core i3	Up to 3.8 GHz	3- to 4-MB cache, dual core 1333/1600 MHz DDR3 memory Dual-channel memory
Third-Generation (Ivy Bridge) Processors		
Core i7	Up to 3.9 GHz	8-MB cache, quad core 1333/1600 MHz DDR3 memory Dual-channel memory
Core i5	Up to 3.8 GHz	6-MB cache, quad core 1333/1600 MHz DDR3 memory Dual-channel memory
Core i3	Up to 3.5 GHz	3-MB cache, dual core 1333/1600 MHz DDR3 memory Dual-channel memory
Second-Generation (Sandy Bridge) Processors		
Core i7 Extreme	Up to 3.9 GHz	15-MB cache, six cores 1066/1333/1600 MHz DDR3 memory Quad-channel memory
Core i7	Up to 3.9 GHz	8- to 12-MB cache, four or six cores 1066/1333/1600 MHz DDR3 memory Dual- or quad-channel memory
Core i5	Up to 3.8 GHz	3- to 6-MB cache, dual or quad core 1066/1333 MHz DDR3 memory Dual-channel memory
Core i3	Up to 3.4 GHz	3-MB cache, dual core 1066/1333 MHz DDR3 memory Dual-channel memory
Pentium	Up to 3.0 GHz	3-MB cache 1066/1333 MHz DDR3 memory Dual-channel memory
Previous-Generation Processors		
Core i7 Extreme	Up to 3.4 GHz	8- or 12-MB cache 1066 MHz DDR3 memory Triple-channel memory
Core i7	Up to 3.3 GHz	8- or 12-MB cache, four or six cores 800/1066/1333 MHz DDR3 memory Dual- or triple-channel memory

Table (1) Current intel processors (continues)

Processor	Speed	Description
Core i5	Up to 3.3 GHz	4- or 8-MB cache, dual or quad core 1066/1333 MHz DDR3 memory Dual-channel memory
Core i3	Up to 3.3 GHz	Dual core, 4-MB cache 1066/1333 MHz DDR3 memory Dual-channel memory
Atom	Up to 2.1 GHz	Up to 1-MB cache, some dual core 800/1066 MHz DDR3 memory 667/800 MHz DDR2 memory Single-channel memory
Celeron, Celeron Desktop, Celeron D	1.6 to 3.6 GHz 533/667/800 MHzFSB	128-KB to 1-MB cache
Core 2 Extreme, Core 2 Quad, Core 2 Duo	Up to 3.2 GHz 533 to 1600 MHz FSB	2- to 12-MB cache Dual or quad core
Pentium Extreme, Pentium, Pentium 4, Pentium D	Up to 3.7 GHz	Up to 4-MB cache, some dual core

Table (1) Current intel processors (continued)

An Intel Sandy Bridge Core i5 processor is shown in Figure (7). You can purchase a processor with or without the cooler. When it's purchased with a cooler, it's called a boxed processor. The cooler is also shown in the photo. If you purchase the cooler separately, make sure it fits the socket you are using.

Figure (7) The Intel Core i5 processor (processor number i5-2320) with boxed cooler

Each processor listed in Table (1) represents several processors that vary in performance and functionality. To help identify a processor, Intel uses a processor number. For example, two Core i7 processors are identified as i7-940 and i7-920. To find details about an Intel processor, search the Intel ARK database at *ark.intel.com* (see Figure 8).

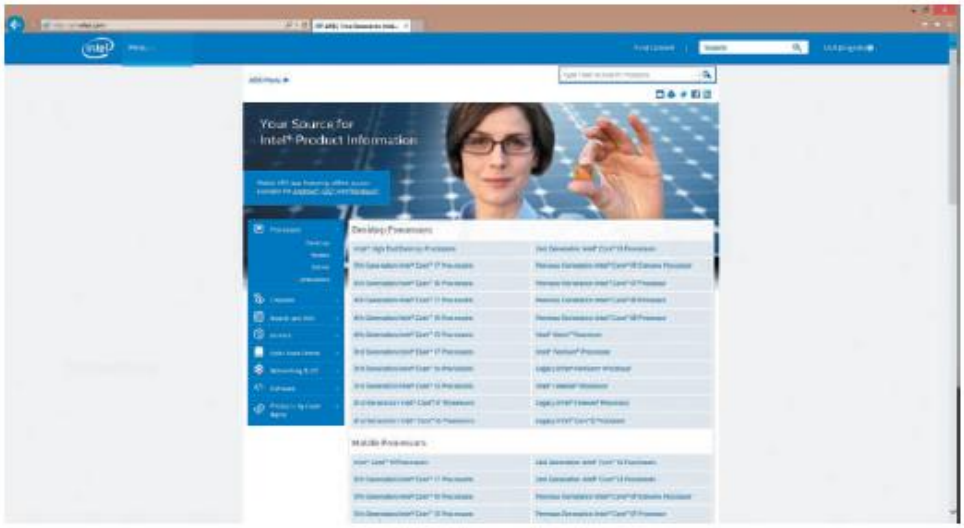

Figure (8) The Intel ARK database at *ark.intel.com* lists details about all Intel products

Some of the Intel mobile processors are packaged in the Centrino processor technology. Using the **Centrino** technology, the Intel processor, chipset, and wireless network adapter are all interconnected as a unit, which improves laptop performance. Several Intel mobile processors have been packaged as a Centrino processor. You also need to be aware of the Intel Atom processor, which is Intel's low-powered processor and is used in low-cost desktops, laptops, and netbooks.

2.2 AMD Processors

Processors by Advanced Micro Devices, Inc., or AMD (*www.amd.com*) are popular in the game and hobbyist markets, and are generally less expensive than comparable Intel processors. Recall that AMD processors use different sockets than do Intel processors, so the motherboard must be designed for one manufacturer's processor or the other, but not both. Many motherboard manufacturers offer two comparable motherboards—one for an Intel processor and one for an AMD processor.

The current AMD processor families are the FX, Phenom, Athlon, Sempron, A Series, and E Series for desktops and the Athlon, Turion, V Series, Phenom, and Sempron for laptops. Table 4-2 lists the current AMD processors for desktops. Figure (9) shows an FX processor by AMD.

Processor	Core Speed	Description
FX Black Edition Family		
FX 4-Core Black Edition	Up to 3.6 GHz	Quad-core uses AM3+ socket
FX 6-Core Black Edition	Up to 3.3 GHz	Six-core uses AM3+ socket
FX 8-Core Black Edition	Up to 3.6 GHz	Eight-core uses AM3+ socket
Phenom Family		
Phenom II X6	Up to 3 GHz	Six-core uses AM3 socket
Phenom II X6 Black	Up to 3.2 GHz	Six-core uses AM3 socket
Phenom II X4	Up to 3.2 GHz	Quad-core uses AM3 socket
Phenom II X3	Up to 2.5 GHz	Triple-core uses AM3 socket
Phenom II X2	Up to 3.1 GHz	Dual-core uses AM3 socket
Phenom X4	Up to 2.6 GHz	Quad-core uses AM2+ socket
Phenom X3	Up to 2.4 GHz	Triple-core uses AM2+ socket
Athlon Family		
Athlon II X4	Up to 2.3 GHz	Quad-core uses AM3 socket
Athlon X4	Up to 3.2 GHz	Quad-core uses FM2 socket
Athlon II X3	Up to 3.4 GHz	Triple-core uses AM3 socket
Athlon II X2	Up to 3 GHz	Dual-core uses AM3 socket
Athlon X2	Up to 2.3 GHz	Dual-core uses AM3 socket
Athlon	Up to 2.4 GHz	Single-core uses AM2 socket
Sempron Family		
Sempron	Up to 2.3 GHz	Single-core uses AM2 socket

Table (2) Current AMD processors

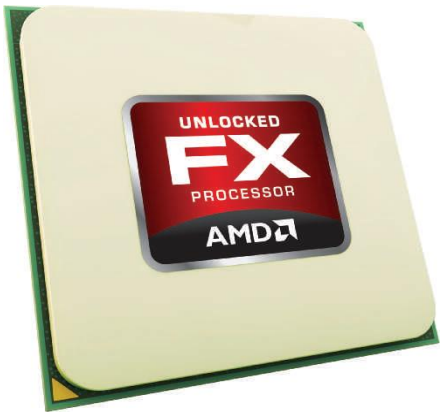

Figure (9) The AMD FX processor can have up to eight cores

3- Memory Technologies

Recall that random access memory (RAM) temporarily holds data and instructions as the CPU processes them and that the memory modules used on a motherboard are made of dynamic RAM or DRAM. DRAM loses its data rapidly, and the memory controller must refresh it several thousand times a second.

RAM is stored on memory modules, which are installed in memory slots on the motherboard (see Figure 10).

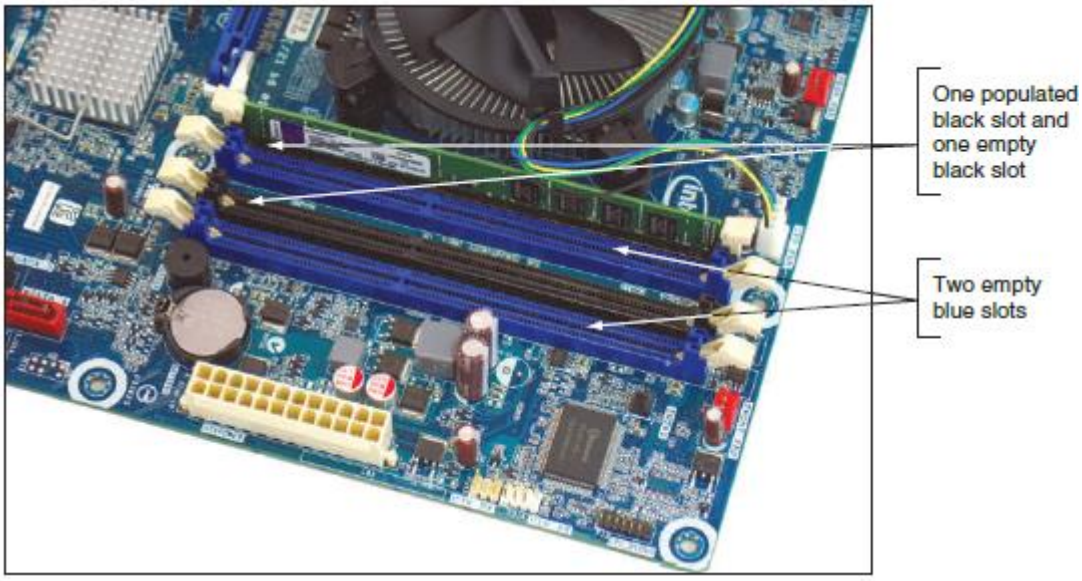

Figure (10) RAM on motherboards today is stored in DIMMs

Several variations of DRAM have evolved over the years. Here are the four major categories of memory modules:

- All new motherboards for desktops sold today use a type of memory module called a **DIMM (dual inline memory module)**.
- Laptops use a smaller version of a DIMM called a **SO-DIMM (small outline DIMM** and pronounced "sew-dim"). MicroDIMMs are used on subnotebook computers and are smaller than SO-DIMMs.
- An older type of module is a **RIMM**, which is designed by Rambus, Inc.
- Really old computers used **SIMMs (single inline memory modules)**. You're unlikely to ever see these modules in working computers.

The major differences among these modules are the width of the data path that each type of module accommodates and the way data moves from the system bus to the module. DIMMs have seen several evolutions. Five versions of DIMMs, one RIMM, and two types of SIMMs are shown in Table (3). Notice the notches on the modules, which prevent the wrong type of module from being inserted into a memory slot on the motherboard. The table includes older and current memory technologies.

Description of Module	Example
288-pin DDR4 DIMM is currently the fastest memory with lower voltage requirements. It can support quad or dual channels or function as single DIMMs. It has one notch near the center of the edge connector.	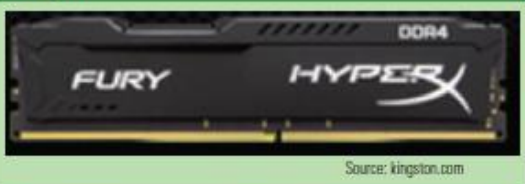 Source: kingston.com
240-pin DDR3 DIMM can support quad, triple, or dual channels or function as single DIMMs. It has an offset notch farther from the center than a DDR2 DIMM.	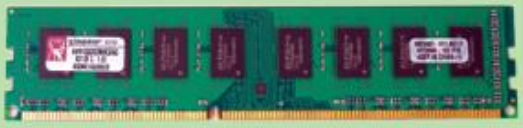
240-pin DDR2 DIMM can support dual channels or function as single DIMMs. It has one notch near the center of the edge connector.	
184-pin DDR DIMM can support dual channels or function as a single DIMM. It has one offset notch.	
168-pin SDRAM DIMM has two notches on the module. The positions of these notches depend on the memory features the DIMM uses.	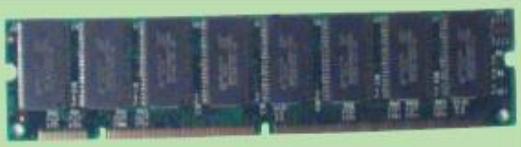
RIMM has 184 pins and two notches near the center of the edge connector.	
72-pin SIMMs were installed in groups of two modules to each bank of memory.	
30-pin SIMMs were installed in groups of four modules to each bank of memory.	

Table (3) Types of memory modules

In this lecture, you see tons of different technologies used by RAM and so many can get a little overwhelming. You need to know about them because each motherboard you might support requires a specific type of RAM. Figure (11) is designed to help you keep all these technologies straight. You might find it a useful road map as you study each technology in the lecture. And who keeps up with all these technologies? JEDEC (www.jedec.org) is the organization responsible for standards used by solid-state devices, including RAM technologies. The goal of each new RAM technology approved by JEDEC is to increase speed and performance without greatly increasing the cost.

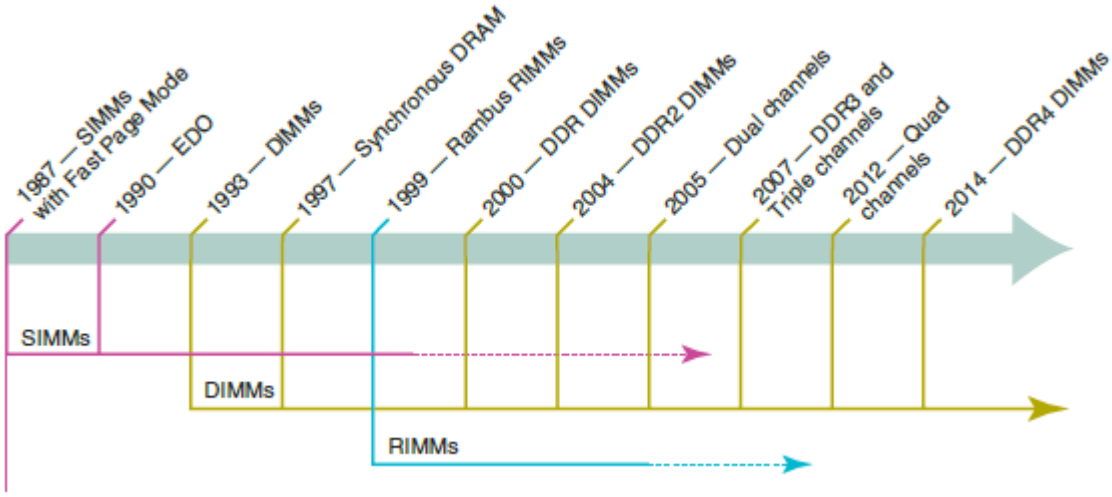

Figure (11) Timeline of memory technologies

Even though an older RAM technology is no longer used by new motherboards, RAM manufacturers continue to produce the older RAM because older motherboards require these replacement modules. In Figure (11), the dotted lines for SIMMs and RIMMs indicate these technologies are now obsolete. All new motherboards today use DIMMs. However, if you check some retail websites, you can see that RIMMs can still be purchased. We'll now look at each of the types of DIMM and SO-DIMM modules and the technologies they use.

3.1 DIMM Technologies

DIMMs use a 64-bit data path. (Some early DIMMs had a 128-bit data path, but they're now obsolete.) A DIMM (dual inline memory module) gets its name because it has independent pins on opposite sides of the module.

Early DIMMs did not run in sync with the system clock because they were too slow to keep up. Their speeds are measured in nanoseconds (ns), which is how long it takes for the module to read or write data. The first DIMM to run synchronized with the system clock was **synchronous DRAM (SDRAM)**, which has two notches, and uses 168 pins. (Don't confuse SDRAM with SRAM. SRAM is static RAM used in processor memory caches, and SDRAM is dynamic RAM used on DIMMs.) Synchronized memory runs in step with the processor and system clock, and its speeds are measured just as processor and bus speeds are measured in MHz.

Double Data Rate SDRAM (**DDR SDRAM**, or **SDRAM II**, or simply **DDR**) is an improved version of SDRAM. DDR runs twice as fast as regular SDRAM, has one notch, and uses 184 pins. Instead of processing data for each beat of the system

clock, as regular SDRAM does, it processes data when the beat rises and again when it falls, doubling the data rate of memory. If a motherboard runs at 200 MHz, DDR memory runs at 400 MHz. Three other improvements over DDR are DDR2, DDR3, and DDR4. **DDR2** is faster and uses less power than DDR. **DDR3** is faster and uses less power than DDR2. The trend continues with **DDR4** being faster and using less power than DDR3. Both DDR2 and DDR3 use 240 pins. They are not compatible because their notches are not in the same position, and the different notch positions keep someone from installing a DDR2 or DDR3 DIMM in the wrong memory slot. DDR4 uses 288 pins.

Factors that affect the capacity, features, and performance of DIMMs include the number of channels they use, how much RAM is on one DIMM, the speed, error-checking abilities, and buffering. All these factors are discussed next.

3.1.1 Single, Dual, Triple, and Quad Channels

When you look at a motherboard, you might notice the DIMM slots are different colours. This colour coding is used to identify the channel each slot uses. Channels have to do with how many DIMM slots the memory controller can address at a time. Early DIMMs only used a **single channel**, which means the memory controller can access only one DIMM at a time. To improve overall memory performance, **dual channels** allow the memory controller to communicate with two DIMMs at the same time, effectively doubling the speed of memory access. A motherboard that supports **triple channels** can access three DIMMs at the same time. Sandy Bridge technology introduced **quad channels** where the processor can access four DIMMs at the same time. DDR, DDR2, DDR3, and DDR4 DIMMs can use dual channels. DDR3 DIMMs can also use triple channels. DDR3 and DDR4 DIMMs can use quad channels. For dual, triple, or quad channels to work, the motherboard and the DIMM must support the technology. Figure (12) shows how dual channelling works on a board with four DIMM slots. The board has two memory channels, Channel A and Channel B. With dual channelling, the two DIMMs installed in the two slots labelled Channel A can be addressed at the same time. If two more DIMMs are installed in the Channel B slots, they can be accessed at the same time.

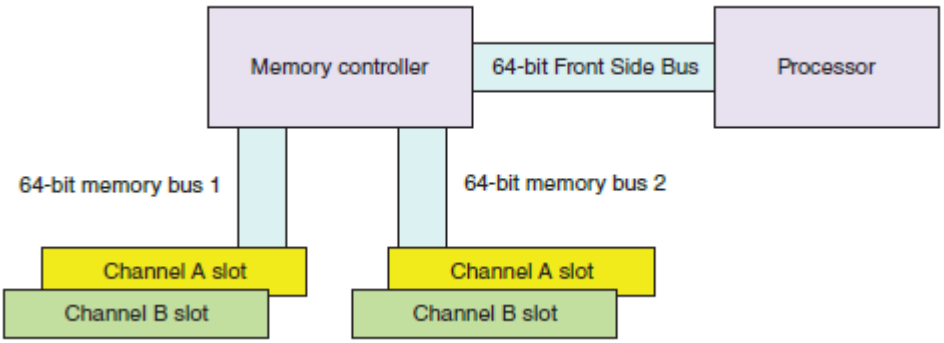

Figure (12) Using dual channels, the memory controller can read from two DIMMs at the same time

When setting up dual channelling, know that the pair of DIMMs in a channel must be equally matched in size, speed, and features, and it is recommended they come from the same manufacturer. A motherboard supporting dual channels was shown in Figure (10). The two black DIMM slots make up the first channel, and the two blue slots make up the second channel. To use dual channelling, matching DIMMs must be installed in the black slots and another matching pair in the blue slots, as shown in Figure (13). Know that the second pair of DIMMs does not have to match the first pair of DIMMs because the first channel runs independently of the second channel. If the two DIMM slots of a channel are not populated with matching pairs of DIMMs, the motherboard will revert to single channelling.

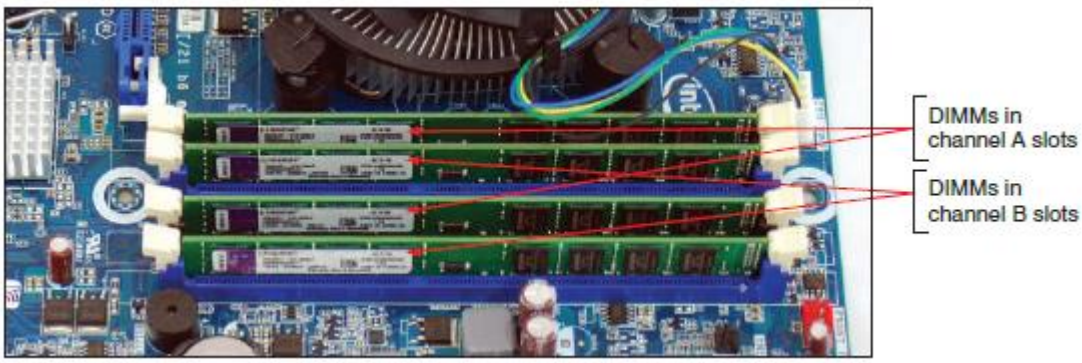

Figure (13) Matching pairs of DIMMs installed in four DIMM slots that support dual channelling

For a triple-channel installation, three DIMM slots must be populated with three matching DDR3 DIMMs (see Figure 14). The three DIMMs are installed in the three blue slots on the board. This motherboard has a fourth black DIMM slot. You can barely see this black slot behind the three filled slots in the photo. If the fourth slot is used, then triple channelling is disabled, which can slow down performance. If a matching pair of DIMMs is installed in the first two slots and

another matching pair of DIMMs is installed in the third and fourth slots, then the memory controller will use dual channels. Dual channels are not as fast as triple channels, but certainly better than single channels.

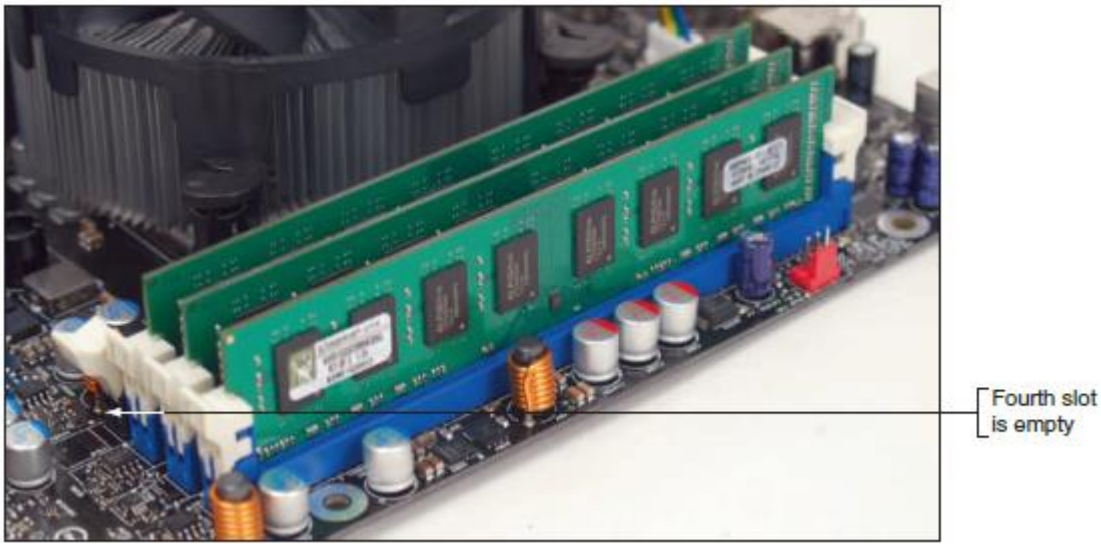

Figure (14) Three identical DDR3 DIMMs installed in a triple-channel configuration

The latest memory technology is quad channelling that was introduced with Intel Sandy Bridge chipsets and processors. Figure (15) shows an Intel motherboard that has the LGA2011 socket and eight memory slots. The processor can access four slots at the same time. The four black slots can be addressed by the processor on one memory channel and the four blue slots on another channel. Second Generation Sandy Bridge and later processors contain the memory controller within the processor package rather than on the chipset.

Figure (15) The Intel Desktop Board DX79TO has eight memory slots and supports two quad channels

To get the highest performance, memory slots are placed on either side of the processor in order to shorten the length of the memory bus. Because of the high

performance of processors that use the LGA2011 socket, Intel recommends that systems using this socket use liquid cooling methods.

3.1.2 DIMM Speeds

DIMM speeds are measured either in MHz (such as 1333 MHz or 800 MHz) or PC rating (such as PC6400). A PC rating is a measure of the total bandwidth in MB/second of data moving between the module and the CPU. To calculate the PC rating for a DDR DIMM, multiply the speed by 8 bytes because a DIMM has an 8-byte or 64-bit data path. For example, a DDR DIMM that runs at 800 MHz has a bandwidth or transfer rate of 800×8 or 6400 MB/second, which is expressed as a PC rating of PC6400. A DDR2 PC rating is usually labelled PC2, a DDR3 PC rating is labelled PC3, and a DDR4 PC rating is labelled PC4. In Figure (16), this memory ad shows the PC rating and lists speed as the DDR rate. Table (4) lists some current PC ratings.

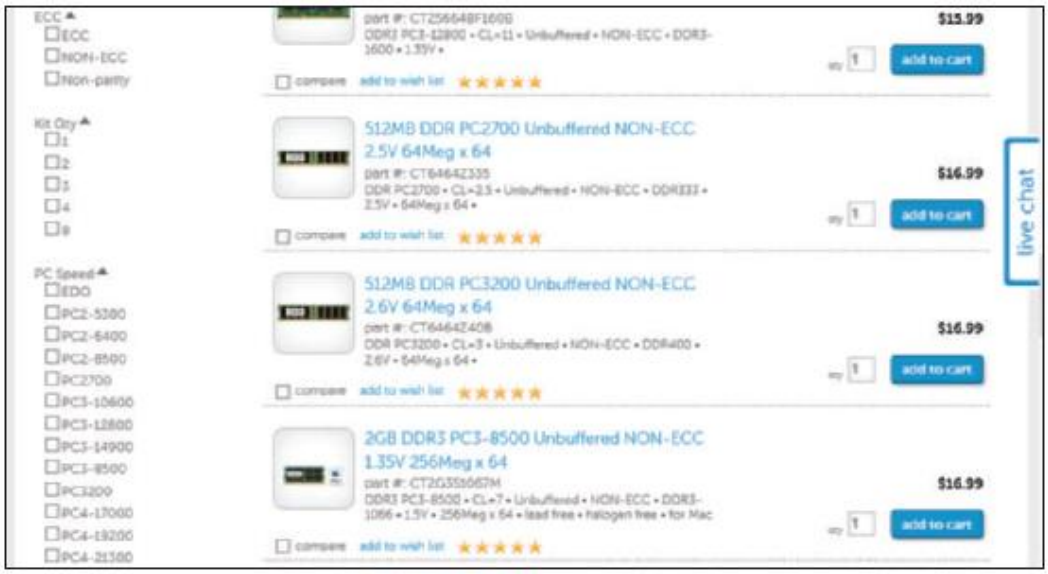

Figure (16) Memory speed is expressed in PC rating and lists speed as DDR rating

3.1.3 Single-Sided and Double-Sided DIMMs

A DIMM can have memory chips installed on one side of the module (called **single-sided**) or both sides of the module (called **double-sided**). Most desktop and laptop processors address memory 64 bits at a time. A **memory bank** is the memory a processor addresses at one time and is 64 bits wide, and a DIMM slot provides a 64-bit data path. However, some double-sided DIMMs provide more than one bank, which means the chips on the DIMM are grouped so that the memory controller addresses one group and then addresses another.

Type of Memory	Speed	PC Rating
DDR4 DIMM	2666 MHz	PC4-21300
DDR4 DIMM	3000 MHz	PC4-24000
DDR4 DIMM	2133 MHz	PC4-17000
DDR3 DIMM	2000 MHz	PC3-16000
DDR3 DIMM	1800 MHz	PC3-14400
DDR3 DIMM	1333 MHz	PC3-10600
DDR2 DIMM	800 MHz	PC2-6400
DDR2 DIMM	667 MHz	PC2-5400
DDR DIMM	500 MHz	PC4000

Table (4) PC ratings for current memory modules

These DIMMs are said to be **dual ranked**, and don't perform as well as DIMMs where all the memory is addressed at one time. Figure (17) shows some examples of DDR dual-ranked memory modules used in servers.

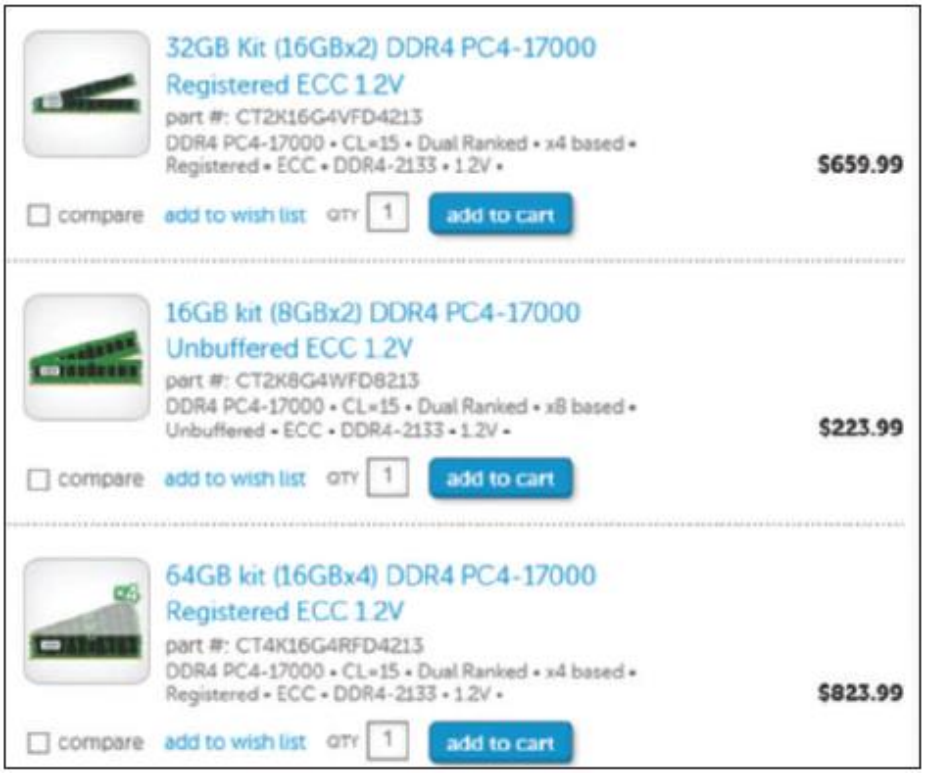

Figure (17) 3 Memory ad lists dual-ranked DDR4 memory

3.1.4 Error Checking and Parity

Because DIMMs intended to be used in servers must be extremely reliable, error-checking technology called **ECC (error-correcting code)** is sometimes used. The memory modules shown in Figure 4-43 are ECC memory. Some DDR, DDR2, DDR3, and DDR4 memory modules support ECC. A DIMM normally has an even number of chips on the module, but a DIMM that supports ECC has an odd

number of chips on the module. The odd extra chip is the ECC chip. ECC compares bits written to the module to what is later read from the module, and it can detect and correct an error in a single bit of the byte. If there are errors in 2 bits of a byte, ECC can detect the error but cannot correct it. The data path width for DIMMs is normally 64 bits, but with ECC, the data path is 72 bits. The extra 8 bits are used for error checking. ECC memory costs more than non-ECC memory, but it is more reliable. For ECC to work, the motherboard and all installed modules must support it. Also, it's important to know that you cannot install a mix of ECC and non-ECC memory on the motherboard because such a mixture causes the system to not work. As with most other memory technologies discussed in this chapter, when buying memory to add to a motherboard, match the type of memory to the type the board supports. To see if your motherboard supports ECC memory, look for the ability to enable or disable the feature in UEFI/BIOS setup, or check the motherboard documentation.

Older SIMMs used an error-checking technology called **parity**. Using parity checking, a ninth bit is stored with every 8 bits in a byte. If memory is using odd parity, it makes the ninth or parity bit either a 1 or a 0, to make the number of 1s in the nine bits odd. If it uses even parity, it makes the parity bit a 1 or a 0 to make the number of 1s in the 9 bits even.

Later, when the byte is read back, the memory controller checks the odd or even state. If the number of bits is not an odd number for odd parity or an even number for even parity, a **parity error** occurs. A parity error always causes the system to halt. On the screen, you see the error message "Parity Error 1" or "Parity Error 2" or a similar error message about parity. Parity Error 1 is a parity error on the motherboard; Parity Error 2 is a parity error on an expansion card.

Figure (18) shows a SIMM for sale. It's pricy because this old technology is hardly ever used. Notice the module is non-parity memory. In the ad, the SIMM is called EDO memory. EDO (extended data out) is a technology used by SIMMs.

Figure (18) A SIMM appears in a memory ad as EDO memory

Notes RAM chips that have become undependable and cannot hold data reliably can cause errors. Sometimes this happens when chips overheat or power falters.

3.1.5 Buffered and Registered DIMMs

Buffers and registers hold data and amplify a signal just before the data is written to the module. (Using buffers is an older technology than using registers.) Some DIMMs use buffers, some use registers, and some use neither. If a DIMM doesn't support registers or buffers, it's referred to as an unbuffered DIMM. Looking at the ad in Figure (16) for value memory used in desktops, you can see all the modules are unbuffered. However, in Figure (17), two of the kits of expensive server memory are registered DIMMs.

3.1.6 CAS Latency and RAS Latency

Two other memory features are **CAS Latency** (CAS stands for "column access strobe") and **RAS Latency** (RAS stands for "row access strobe"), which are two ways of measuring access timing. Both features refer to the number of clock cycles it takes to write or read a column or row of data off a memory module. CAS Latency is used more than RAS Latency. Lower values are better than higher ones. For example, CL8 is a little faster than CL9.

Ads for memory modules might give the CAS Latency value within a series of timing numbers, such as 5-5-5-15. The first value is CAS Latency, which means the module is CL5. The second value is RAS Latency. Looking back at Figure (16), you can see CL ratings vary from 2.5 to 11.

4- LEACTURE SUMMARY

- The most important component on the motherboard is the processor, or central processing unit. The two major manufacturers of processors are Intel and AMD.
- Processors are rated by the processor speed, the socket and chipset the processor can use, processor architecture (32-bit or 64-bit), multicore rating, how much internal memory cache the processor has, amount and type of RAM the processor can support, and the computing technologies the processor can use.
- A processor's memory cache inside the processor housing can be an L1 cache (contained on the processor die), L2 cache (off the die), and L3 cache (farther from the core than L2 cache).

- The core of a processor has two arithmetic logic units (ALUs). Multicore processors have two, three, or more cores (called dual core, triple core, quad core, and so forth). Each core can process two threads at once if the feature is enabled in UEFI/BIOS setup.
- The current families of Intel processors for desktops include the Core, Atom, Celeron, and Pentium families of processors. Several different processors are within each family.
- The current AMD desktop processor families are the FX, Phenom, Athlon, and Sempron. Several processors exist within each family.
- DRAM is stored on DIMMs for desktop computers and SO-DIMMs for laptops.
- Types of current DIMMs are DDR4 with 288 pins, DDR3 and DDR2 DIMMs that have 240 pins, and DDR DIMMs with 184 pins.
- DIMMs can be single-sided or double-sided. Some double-sided DIMMs provide more than one memory bank and are called dual ranked or quad ranked. A memory bank has a 64-bit data path and is accessed by the processor independently of other banks.
- DIMMs can work together in dual channels, triple channels, and quad channels so that the memory controller can access more than one DIMM at a time to improve performance. In a channel, all DIMMs must match in size, speed, and features. DDR3 DIMMs can use dual, triple, or quad channelling, but DDR and DDR2 DIMMs can only use dual channels. DDR4 DIMMs can use dual or quad channels.
- DIMM speeds are measured in MHz (for example, 1333 MHz) or PC rating (for example, PC3-10600).
- The memory controller can check memory for errors and possibly correct those errors using ECC (error-correcting code). Using parity, an older technology, the controller could only recognize an error had occurred, but not correct it.
- Buffers and registers are used to hold data and amplify a data signal. A DIMM is rated as a buffered, registered, or unbuffered DIMM.
- CAS Latency (CL) and RAS Latency (RL) measure access time to memory. The lower values are faster than the higher values.