Turbo-Prop Engine

3.1 ***Introduction*.**

The turboprop uses a gas turbine core to turn a propeller. Propeller engines develop thrust by moving a large mass of air through a small change in velocity. Propellers are very efficient and can use nearly any kind of engine to turn the prop. The propeller is driven through a reduction gear by either the compressor–turbine shaft or a power (or free power) turbine shaft.

The reduction gearbox converts the high RPM/low torque output to a low RPM/high torque. Turboprop power is measured in total equivalent power (either measured in horsepower or kilowatts). The major part of this total equivalent power is generated by the propeller, while its minor part is developed from the exhaust gases.

Turboprops have higher propulsive efficiency than turbojet and turbofan engines when they fly under 30,000 ft and speeds below 400–450 mph. This is due to the low jet velocities of both the propeller and exhaust. Propellers become less efficient as the speed of the aircraft increases. In this case, the flow may reach or even exceed sonic speed along the outer portion of its blades giving rise to a substantial increase in drag coefficient and awful decrease in lift coefficient.

3.2Classification of turboprop engines

1- Based on number of shaft (spool).

Turboprop engines may be

1. Single spool.
2. Double spools
3. Triple spools.

For a single-spool engine, the only one turbine drives the only one compressor and propeller (Fig. 3.1).

A two-spool turboprop is composed of one or two compressors and two turbines (high pressure and low pressure). The low-pressure turbine drives either the single compressor or the low-pressure compressor (if two compressors are present) and also drives the propeller (Fig. 3.2).

Finally the three-spool engine features three turbines and two compressors. The propeller is driven by the low-pressure turbine (Fig. 3.3). The exhaust velocity of a turboprop is low and contributes little thrust because most of the energy of the core hot gases has gone into turning the drive shaft.

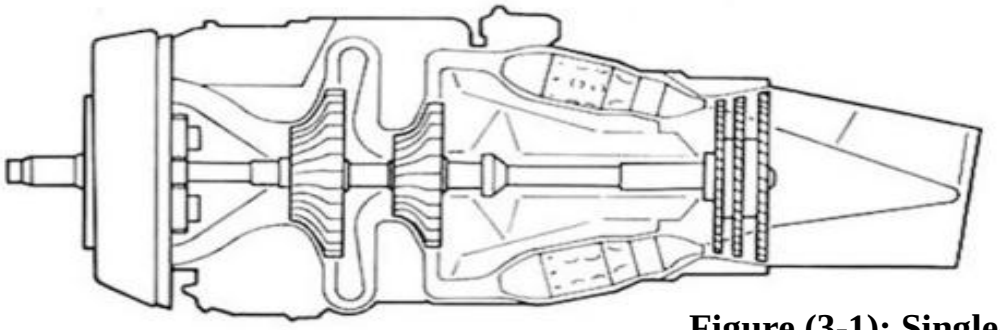

Figure (3-1): Single-spool turboprop

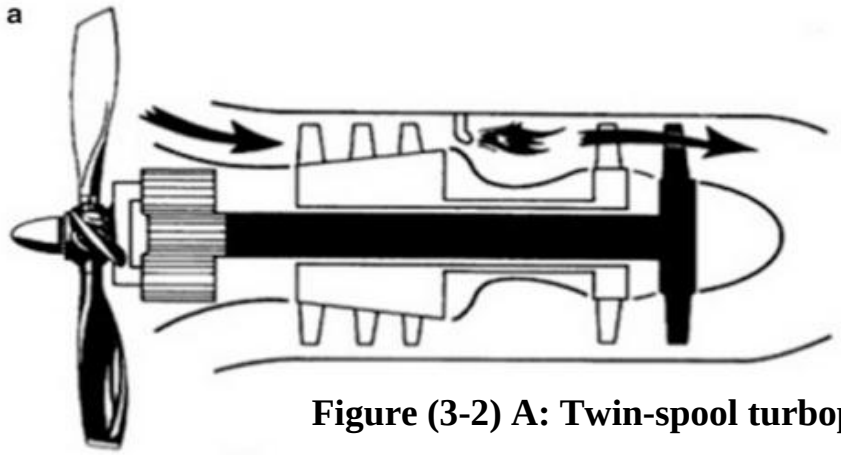

Figure (3-2) A: Twin-spool turboprop/ LPT drives propeller

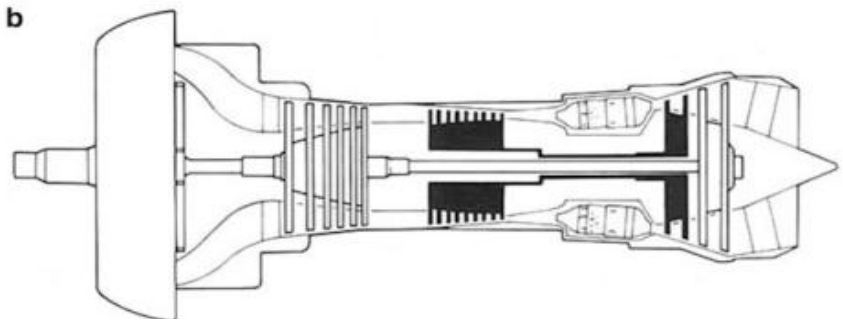

Figure (3-2) B: Twin-spool turboprop/ LPT drives both LPC and propeller engine

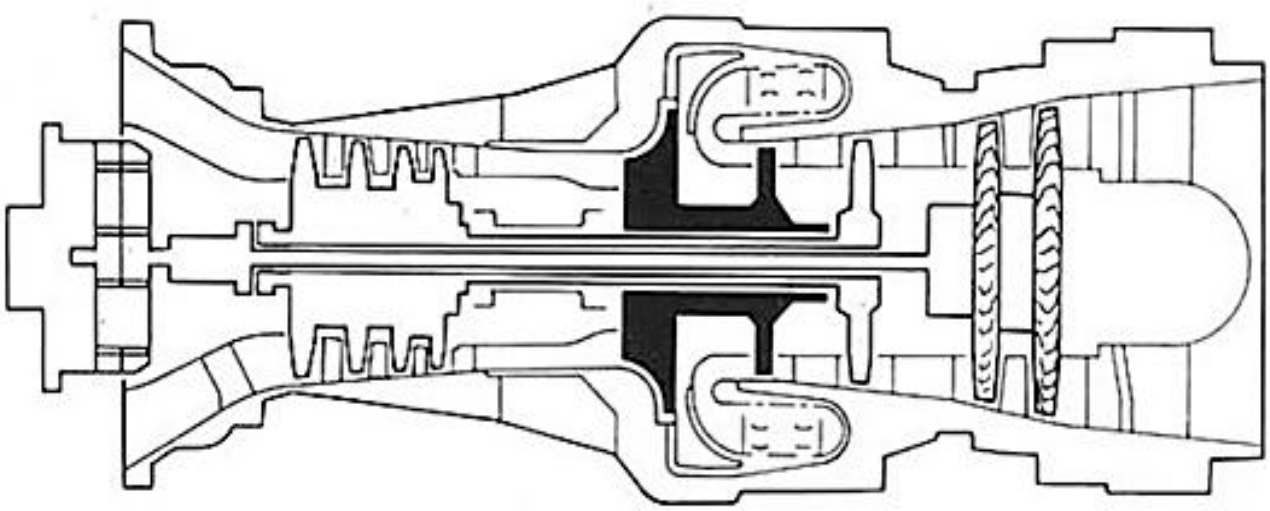

Figure (3-3): Three-spool turboprop engine

2- Based on the direction of flow that produced from propeller

The turboprop engine may be either of

1. Pusher type
2. Tractor (puller) type.

Pusher types are installed to either the wing or fuselage. Two possible wing locations are seen, namely, mid-wing or wing tip. Concerning fuselage, turboprops are either installed to the aft pylon or aft end. Figure (3-4).

Tractor types have three possible types of installation, namely, wing, fuselage, and tail. Turboprops are either installed to the mid or tip of the wing. Concerning fuselage, two possible locations are seen, namely, forward or aft-fuselage pylon.

Finally tail installation shows three possible positions, namely, low, median, or tip of the horizontal tail. Figure (3-5).

Figure (3-4): Turbo-prop Engine / Pusher types

Figure (3-4): Turbo-prop Engine / Puller types

3.3 Thermodynamics Analysis of Turboprop Engines

The different modules of a turboprop engine are the intake or inlet, one or two compressors, a combustion chamber, and one or more (up to three) turbines and the exhaust nozzle.

3.3.1 Single-Spool Turboprop

A simplified layout of a single-spool turboprop engine together with its temperature–entropy (T-s) diagram is shown in Figs. 3.5 .

The flight speed is expressed as

$$U = \sqrt{\gamma R T_a} \quad \ldots\ldots\ldots\ldots\ldots\ldots\ldots\ldots\ldots\ldots\ldots\ldots\ldots\ldots\ldots\ldots\ldots\ldots\ldots Eq.(3-1)$$

The thermodynamic properties at different locations within the engine are obtained as follows:

$$\gamma_c = \frac{C_{Pc}}{C_{Pc} - R}, \quad \gamma_{cc} = \frac{C_{Pcc}}{C_{Pcc} - R}, \quad \gamma_t = \frac{C_{Pt}}{C_{Pt} - R}, \quad \gamma_n = \frac{C_{Pn}}{C_{Pn} - R}$$

The different modules of the engine are treated hereafter.

1. Intake

The intake has an isentropic efficiency ($\boldsymbol{\eta_d}$), and the ambient temperature and pressure are ($\mathbf{P_a}$ and $\mathbf{T_a}$, respectively), and the flight Mach number is $\mathbf{M_a}$. The temperature and pressure at the intake outlet are $\mathbf{T_{02}}$ and $\mathbf{P_{02}}$ are given by the following relations:

$$P_{02} = P_a \left(1 + \eta_d \frac{\gamma_c - 1}{2} M_a^2\right)^{\gamma_c/\gamma_c - 1} \quad \ldots\ldots\ldots\ldots\ldots\ldots\ldots\ldots\ldots Eq.(3-2)$$

$$T_{02} = T_a \left(1 + \frac{\gamma_c - 1}{2} M^2\right) \ldots\ldots\ldots\ldots\ldots\ldots\ldots\ldots\ldots\ldots\ldots\ldots\ldots Eq.(3-3)$$

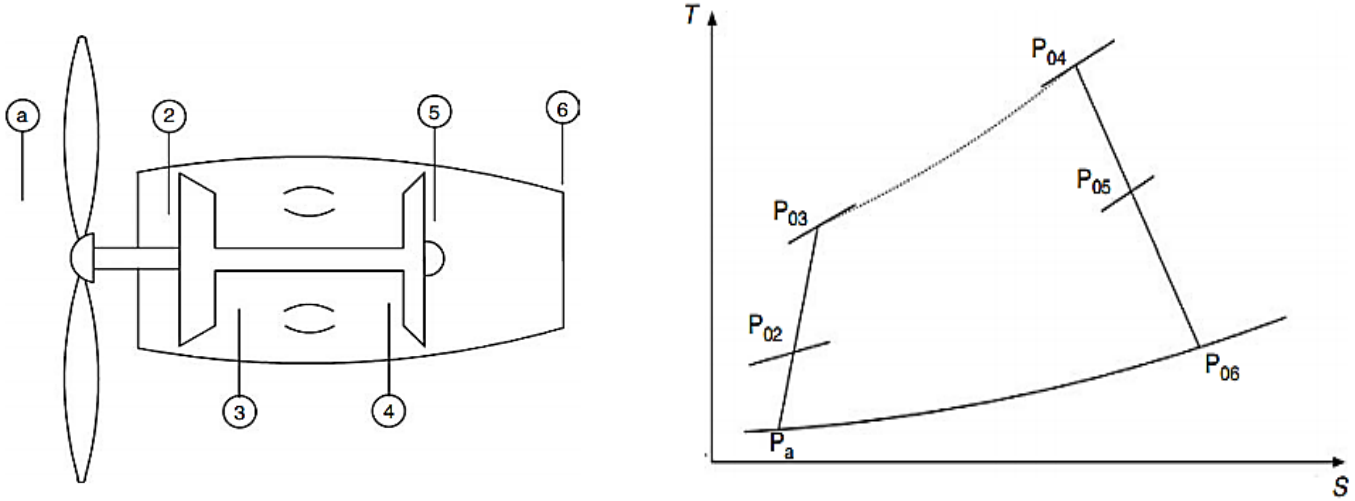

Figure (3-5): Layout and Temperature–entropy diagram of single spool .

2. ***Compressor:***

For a known compressor pressure ratio (π_c) its isentropic efficiency is (η_c); thus the pressure and temperature at the outlet of the compressor as well as the specific power of the compressor are given by the following relations:

$$P_{03} = (P_{02})(\pi_c) \dots\dots\dots\dots\dots\dots\dots\dots\dots\dots\dots\dots\dots\dots\dots\dots\dots\dots\dots\dots Eq.(3-4)$$

$$T_{03} = T_{02}\left(1 + \frac{\pi_c^{\frac{\gamma_c - 1}{\gamma_c}} - 1}{\eta_c}\right) \dots\dots\dots\dots\dots\dots\dots\dots\dots\dots\dots\dots\dots\dots\dots\dots Eq.(3-5)$$

$$\Delta h_c = C_{Pc}(T_{03} - T_{02}) \dots\dots\dots\dots\dots\dots\dots\dots\dots\dots\dots\dots\dots\dots\dots\dots\dots\dots Eq.(3-6)$$

3. ***Combustion chamber:***

The combustion process takes place in the combustor with an efficiency of (η_b), while the products of combustion experience a pressure drop equal to (ΔP). The pressure at the outlet of the combustion chamber and the fuel-to-air ratio are given by the following:

$$P_{04} = (1 - \Delta P)(P_{03}) \dots\dots\dots\dots\dots\dots\dots\dots\dots\dots\dots\dots\dots\dots\dots\dots Eq.(3-7)$$

$$f = \frac{C_{Pcc}T_{04} - C_{Pc}T_{03}}{\eta_b Q_R - C_{Pcc}T_{04}} \dots\dots\dots\dots\dots\dots\dots\dots\dots\dots\dots\dots\dots\dots\dots\dots Eq.(3-8)$$

4. ***Turbine:***

It is not easy here to determine the outlet pressure and temperature of the turbine. The reason is that the turbine here drives both the compressor and propeller. The portion of each is not known in advance.

Let us first examine the power transmission from the turbine to the propeller as illustrated in Figure 3.6.

The output power from the turbine is slightly less than the extracted power owing to friction of the bearings supporting the turbine. This loss is accounted for by the mechanical efficiency of the turbine (η_{mt}).

Moreover, the mechanical losses encountered in the bearings supporting the compressor are accounted for by the compressor mechanical efficiency (η_{mc}). The difference between both the turbine and compressor powers is the shaft power delivered to the reduction gear box where additional friction losses are encountered and accounted for by the gearbox mechanical efficiency (η_g).

Finally the output power available from the propeller is controlled by the propeller efficiency (η_{pr}).

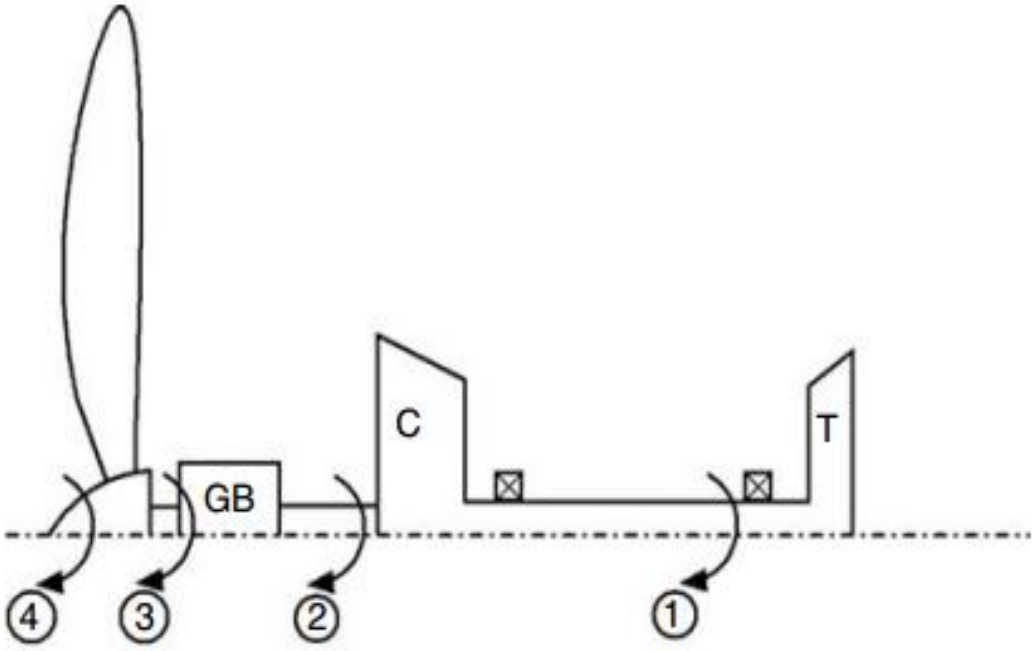

Figure (3-6): Power transmission through a single-spool turboprop engine.

Power transmission

1- at (1) $\eta_{mt}W_t$

2 – at (2) $\left(\eta_{mt}W_t - \frac{W_t}{\eta_{mt}}\right)$

3 – at (3) $\eta_{gb}\left(\eta_{mt}W_t - \frac{W_t}{\eta_{mt}}\right)$

4 – at (4)$\eta_{pr}\,\eta_{gb}\left(\eta_{mt}W_t - \frac{W_t}{\eta_{mt}}\right)$

Now, Figure 3.7 illustrates the enthalpy–entropy diagram for the expansion processes through both the turbine and the exhaust nozzle.

Now let us define the following symbols as shown in Figure 3.7. Δh is the enthalpy drop available in an ideal (isentropic) turbine and exhaust nozzle and, $\alpha\Delta h = \Delta h_{ts}$, which is the fraction of Δh that would be available from an isentropic turbine having the actual pressure ratio

$$\Delta h_{ns} = (1-\alpha)\Delta h$$

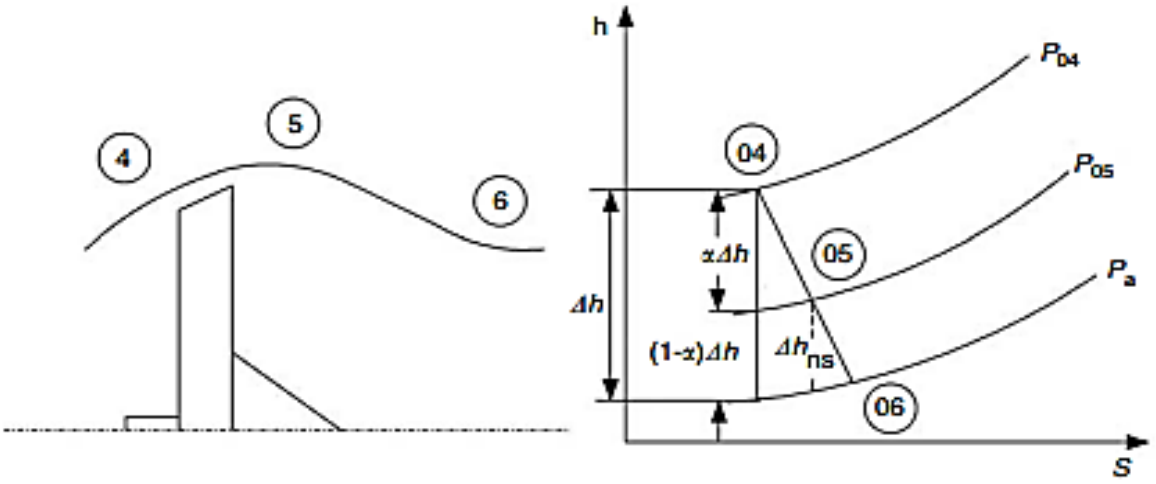

Figure (3-7): Expansion in the turbine and nozzle of a single-spool turboprop.

Which is also the fraction of Δh that may be available from an isentropic nozzle.
η_t is the isentropic efficiency of turbine
ηn is the isentropic efficiency of the exhaust nozzle.

Now to evaluate these values from the following thermodynamic relations:

$$\Delta h = C_{Pt} T_{04} \left[1 - \left(\frac{P_a}{P_{04}}\right)^{(\gamma_h - 1)/\gamma_h}\right] \dots\dots\dots\dots\dots\dots\dots\dots\dots\dots\dots\dots\dots\dots\dots\dots Eq.(3-9)$$

It was assumed in Eq. (3-9) that the ratios between specific heats within the turbine and nozzle are constant, or

$$\gamma_t = \gamma_n = \gamma_h$$

The exhaust gas speed (U_e) is given by the relation

$$\frac{U^2{}_e}{2} = \eta_n (1-\alpha)\Delta h$$

$$U_e = \sqrt{2(1-\alpha)\Delta h \eta_n} \dots\dots\dots\dots\dots\dots\dots\dots\dots\dots\dots\dots\dots\dots\dots\dots\dots\dots Eq.(3-10)$$

The propeller thrust T_{pr} is correlated to the propeller power by the relation

$$T_{pr} = \frac{\dot{m}_a \eta_{pr} \eta_g W_{shaft}}{U} \dots\dots\dots\dots\dots\dots\dots\dots\dots\dots\dots\dots\dots\dots\dots\dots\dots\dots Eq.(3-11)$$

The shaft power is

$$W_{shaft} = \eta_{mt}(1 + f - b)\Delta h_t - \frac{\Delta hc}{\eta_{mc}} \dots\dots\dots\dots\dots\dots\dots\dots\dots\dots Eq.(3-12)$$

Where the turbine specific power is

$$\Delta h_t = \eta_t a \Delta h \quad \ldots\ldots\ldots\ldots\ldots\ldots\ldots\ldots\ldots Eq.(3-13)$$

($\dot{m}_a$) is the air induction rate per second

The fuel-to-air ratio (***f***) and the bleed ratio (***b***)are defined as

$$f = \frac{\dot{m}_f}{\dot{m}_a} \qquad and \qquad b = \frac{\dot{m}_b}{\dot{m}_a}$$

So:

$$T_{pr} = \frac{\dot{m}_a \eta_{pr} \eta_g}{U}\left[(1+f-b)\eta_{mt}\eta_t a\Delta h - \frac{\Delta hc}{\eta_{mc}}\right] \ldots\ldots\ldots Eq.(3-14)$$

The thrust force obtained from the exhaust gases leaving the nozzle is denoted as (T_n) and is expressed by the relation

$$T_n = \dot{m}_a[(1+f-b)U_e - U] \ldots\ldots\ldots\ldots\ldots\ldots Eq.(3-15)$$

Total thrust $\quad T = T_{pr} + T_n$

$$\frac{T}{\dot{m}} = \frac{\eta_{pr}\eta_g}{U}\left[(1+f-b)\eta_{mt}\eta_t a\Delta h - \frac{\Delta hc}{\eta_{mc}}\right] + \left[(1+f-b)\sqrt{2(1-\alpha)\Delta h \eta_n} - U\right] ..(3-16)$$

Differentiate (3.16) with respect (α), we get the optimum value (α_{opt}) that maximizes the thrust T for fixed component efficiencies, flight speed (U), compressor specific power Δh_c, and expansion power Δh. This optimum value is expressed by Eq. (3.17):

$$\alpha_{opt} = 1 - \frac{U^2}{2\Delta h}\left(\frac{\eta_n}{\eta^2{}_{pr}\ \eta^2{}_g\ \eta^2{}_{mt}\ \eta^2{}_t}\right) \ldots\ldots\ldots\ldots\ldots Eq.(3-17)$$

This particular value of (α) defines the optimum power split between the propeller and the jet. Substituting this value (α_{opt}) in Eq. (3.16) gives the maximum value of the thrust force. The corresponding value of the exhaust speed is given by the following equation:

$$U_e = U\frac{\eta_n}{\eta_{pr}\eta_g\eta_{mt}\eta_t} \ldots\ldots\ldots\ldots\ldots\ldots\ldots\ldots Eq.(3-18)$$

3.3.2 Two-Spool Turboprop

Aschematic diagram of a two-spool engine having a free power turbine together with its temperature– entropy diagram is shown in Figures 3.8.

The low-pressure spool is composed of the propeller and the free power turbine while the high-pressure spool is composed of the compressor and the high-pressure or gas generator turbine.

The different components are examined here.

1- ***Intake:*** The same relations for the outlet pressure and temperature in the single spool; Equations 3.2 and 3.3 are applied here.

2- ***Compressor:*** The same relations in Equations 3.4 and 3.5 are applied here. The specific work of compressor (the work / kg of air inducted into the engine) is

$$\Delta h_c = C_{Pc}(T_{03} - T_{02}) \dots\dots\dots\dots\dots\dots\dots\dots\dots\dots\dots\dots\dots\dots\dots\dots\dots\dots\dots\dots Eq.(3-6)$$

3- ***Combustion chamber***: The fuel-to-air ratio is obtained from the same relation, namely.

$$P_{04} = (1 - \Delta P)(P_{03}) \dots\dots\dots\dots\dots\dots\dots\dots\dots\dots\dots Eq.(3-7)$$

$$f = \frac{C_{Pcc}T_{04} - C_{Pc}T_{03}}{\eta_b Q_R - C_{Pcc}T_{04}} \dots\dots\dots\dots\dots\dots\dots\dots\dots\dots\dots\dots\dots\dots Eq.(3-8)$$

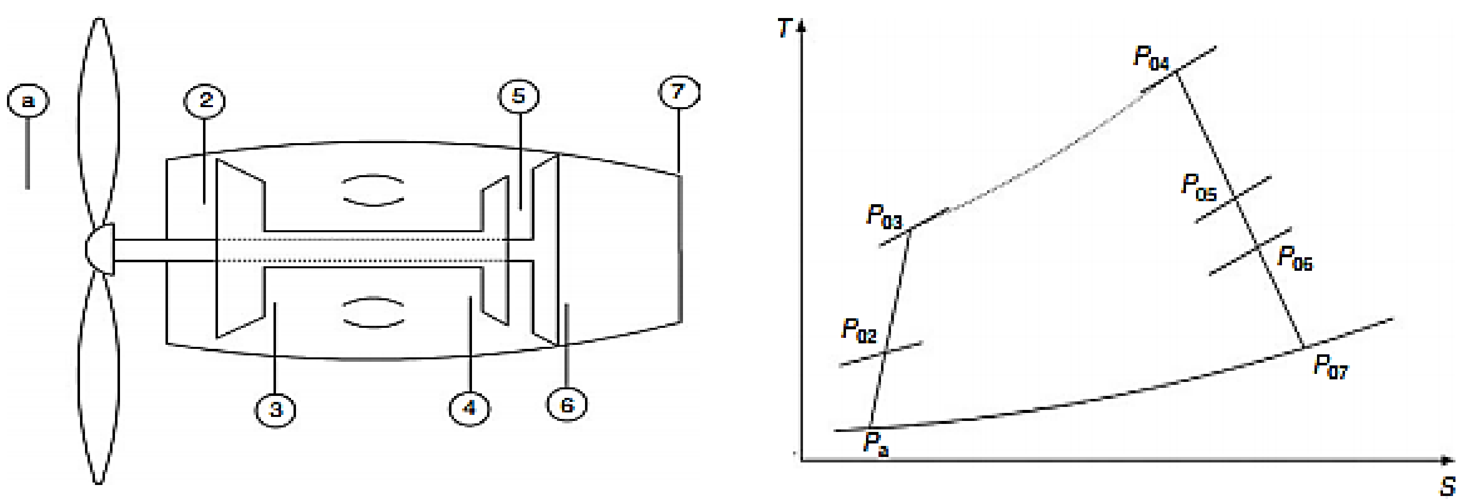

Figure (3-8): Layout and Temperature–entropy diagram of Free power turbine turboprop engine.

4- ***Gas generator turbine***: An energy balance between the compressor and this high pressure turbine gives

$$\frac{\Delta h_c}{\eta_{mc}} = \eta_{mt}\Delta h_t \ldots\ldots\ldots\ldots\ldots\ldots\ldots\ldots\ldots\ldots\ldots\ldots\ldots\ldots\ldots\ldots\ldots\ldots Eq.(3-19)$$

The specific work generated in the turbine of the gas generator is

$$\Delta h_t = C_{Pt}(T_{04} - T_{05})(1 + f - b) \ldots\ldots\ldots\ldots\ldots\ldots\ldots\ldots\ldots\ldots\ldots\ldots\ldots Eq.(3-20)$$

From Equations 3.19 and 3.20 with known turbine inlet temperature, the outlet temperature (T_{05}) is calculated from the following relation:

$$T_{05} = T_{04} - \frac{C_{Pc}(T_{03} - T_{02})}{C_{Pt}\,\eta_{mc}\eta_{mt}(1 + f - b)} \ldots\ldots\ldots\ldots\ldots\ldots\ldots\ldots\ldots\ldots\ldots Eq.(3-21)$$

Moreover, from the isentropic efficiency of the gas generator turbine, the outlet pressure (P_{05}) is calculated from the relation given below:

$$P_{05} = P_{04}\left[1 - \frac{(T_{04} - T_{05})}{\eta_t T_{04}}\right]^{\frac{\gamma_t}{\gamma_t - 1}} \ldots\ldots\ldots\ldots\ldots\ldots\ldots\ldots\ldots\ldots\ldots Eq.(3-22)$$

5- ***Free power turbine***: Figure 3.9 illustrates the power flow from the free turbine to the propeller.

The work developed by the free power turbine per unit mass inducted into the engine is

$$\Delta h_{ft} = C_{Pft}(1 + f - b)(T_{05} - T_{06}) \ldots\ldots\ldots\ldots\ldots\ldots\ldots\ldots\ldots\ldots\ldots Eq.(3-23)$$

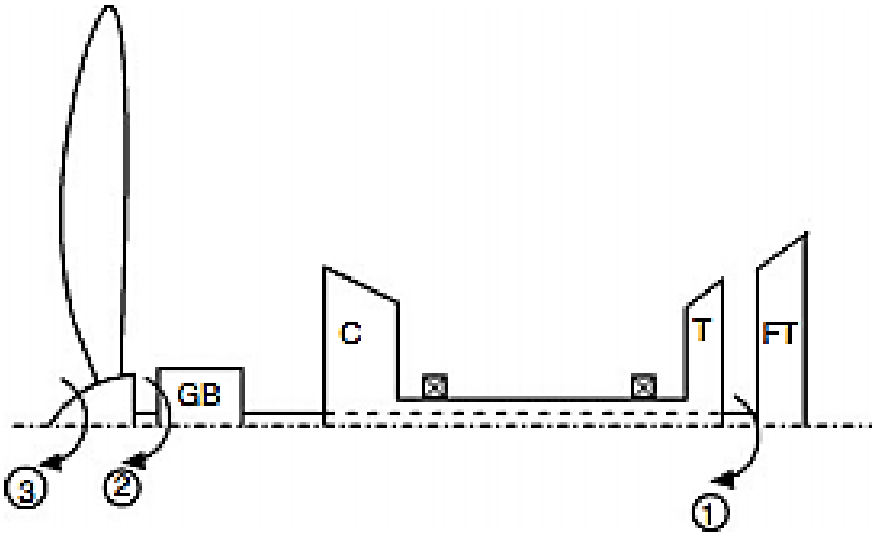

Power transmission

At (1) $\eta_{mft}W_{ft}$

At (2) $\eta_{gb}\eta_{mft}W_{ft}$

At (3) $\eta_{pr}\eta_{gb}\eta_{mft}W_{ft}$

Figure (3-9): Power transmission through a double-spool turboprop engine.

The temperature (T_{06}) is unknown and cannot be calculated.

Referring to Figure 3.10, which defines the successive expansion processes in the free power turbine and the nozzle, we have Δh = enthalpy drop available in an ideal (isentropic) turbine and exhaust nozzle; a full expansion to the ambient pressure is assumed in the nozzle ($P_7 = P_a$).

Δh is then calculated as given below:

$$\Delta h = C_{Ph} T_{05} \left[1 - \left(\frac{P_7}{P_{05}}\right)^{(\gamma_h - 1)/\gamma_h}\right] \dots\dots\dots\dots\dots\dots\dots\dots\dots\dots\dots\dots\dots\dots\dots\dots Eq.(3-24)$$

Where $Cp_h = Cp_t = Cp_n$ and $\gamma_h = \gamma_t = \gamma_n$.

$\alpha\Delta h = \Delta h_{fts}$, which is the fraction of Δh that would be available from an isentropic free power turbine having the actual pressure ratio

$$\Delta h_{ft} = \eta_{ft} \Delta h_{fts} \dots\dots\dots\dots\dots\dots\dots\dots\dots\dots\dots\dots\dots\dots\dots\dots\dots\dots\dots\dots Eq.(3-25)$$

Where η_{ft} is the isentropic efficiency of the free power turbine

Following the same procedure described above to determine the optimum α, the propeller thrust and the exhaust thrust are determined from the following relations:

$$T_{pr} = \frac{\dot{m}_a \eta_{pr} \eta_g}{U}\left[(1 + f - b)\eta_{mft}\eta_{ft} a \Delta h\right] \dots\dots\dots\dots\dots Eq.(3-25)$$

$$T_n = \dot{m}_a[(1 + f - b)U_e - U] \dots\dots\dots\dots\dots\dots\dots\dots\dots Eq.(3-26)$$

The total thrust is then given by,

$$T = T_{pr} + T_n$$

$$\frac{T}{\dot{m}} = \frac{\eta_{pr}\eta_g}{U}\left[(1 + f - b)\eta_{mft}\eta_{ft} a \Delta h\right] + \left[(1 + f - b)\sqrt{2(1-\alpha)\Delta h\, \eta_n} - U\right] \dots (3-27)$$

Where $\boldsymbol{\eta_{mft}}$ is the mechanical efficiency of the free power turbine.

Maximizing the thrust T for fixed component efficiencies, flight speed U and Δh yield the following optimum value of $\boldsymbol{(\alpha_{opt})}$

$$\alpha_{opt} = 1 - \frac{U^2}{2\Delta h}\left(\frac{\eta_n}{\eta^2_{pr}\ \eta^2_g\ \ \eta^2_{mft}\ \ \eta^2_{ft}}\right) \dots\dots\dots\dots\dots\dots\dots\dots Eq.(3-28)$$

Substituting this value of (α) in Equation 3.27 gives the maximum value of the thrust force. The corresponding value of the exhaust speed is given by the following equation:

$$U_e = U\frac{\eta_n}{\eta_{pr}\eta_g\eta_{mft}\eta_{ft}} \quad \ldots\ldots\ldots\ldots\ldots\ldots\ldots\ldots\ldots\ldots\ldots\ldots\ldots\ldots\ldots\ldots\ldots\ldots\ldots\ldots Eq.(3-29)$$

The outlet conditions at the free turbine outlet are easily calculated from the known value of (Δh) and (α_{opt}).

3.4 ***Equivalent Engine Power***

3.4.1 Static Condition

During testing (on a test bench) or takeoff conditions, the total equivalent horsepower is denoted by TEHP and is equal to the shaft horsepower (SHP) plus the ESHP equivalent shaft horsepower to the net jet thrust.

For estimation purposes it is taken that, under sea level static conditions, one SHP is equivalent to approximately 2.6 lb of jet thrust. Thus

$$(TEHP)_{takeoff} = SHP + \frac{Jet\ thrust\ (Ib)}{2.6} \quad \ldots\ldots\ldots\ldots\ldots\ldots\ldots\ldots\ldots\ldots Eq.(3-30)$$

Switching to SI units, experiments have shown also that the total equivalent power (TEHP) in kW is related to the shaft power (SP) also in kW by the relation:

$$(TEHP)_{takeoff} = SHP(kW) + \frac{Jet\ thrust\ (N)}{8.5} \quad \ldots\ldots\ldots\ldots\ldots\ldots\ldots\ldots Eq.(3-31)$$

The jet thrust on test bench (ground testing) or during takeoff is given by

$$T = \dot{m}_a(1 + f - b)U_e \ldots\ldots\ldots\ldots\ldots\ldots\ldots\ldots\ldots\ldots\ldots\ldots\ldots\ldots\ldots\ldots\ldots Eq.(3-32)$$

3.4.2 Flight Operation

For a turboprop engine during flight, the equivalent shaft horsepower (ESHP) is equal to the (SHP) plus (the jet thrust power) as per the following relation:

$$ESHP = SHP + \frac{T(N) \times U(mls)}{745.7 \times \eta_{pr}} \quad \ldots\ldots\ldots\ldots\ldots\ldots\ldots\ldots\ldots\ldots\ldots\ldots\ldots Eq.(3-33)$$

Where the jet thrust is

$$T = \dot{m}_a[(1 + f - b)U_e - U] \quad \ldots\ldots\ldots\ldots\ldots\ldots\ldots\ldots\ldots\ldots\ldots\ldots\ldots Eq.(3-34)$$

Normally a value of $\eta_{pr} \approx 80\%$ is employed as industry standard.

3.4.3 Fuel Consumption

The fuel consumption is identified by the thrust-specific fuel consumption (TSFC) defined as TSFC = $\dot{m}_f / T$ and expressed in terms of kg fuel/N · h.

Typical values are:- $0.27 - 0.36$ kg fuel /kW · h

Example -1-

A single spool turboprop engine when running at maximum rpm at sea level conditions (P_a = 1 bar and T_a = 288 K) had the following particulars:

$m_a = 14.6\,\text{kg/s}$, $\pi_c = \frac{P_{03}}{P_{02}} = 8.5$, $P_{04} = 0.96\,P_{03}$
$T_{04} = 1220\,\text{K}$, $V_J = 250\,\text{m/s}$,
$\eta_c = 0.87$, $\eta_{CC} = 0.98$, $\eta_t = 0.9$
$\eta_n = 0.95$, $\eta_m = 0.98$, $\eta_{pr} \times \eta_g = 0.78$
$C_{P_c} = 1.01\,\text{kJ/kg K}$, $C_{P_{CC}} = 1.13\,\text{kJ/kg} \cdot \text{K}$ $C_{P_t} = C_{P_n} = 1.14\,\text{kJ/kg} \cdot \text{K}$
$Q_R = 43{,}000\,\text{kJ/kg} \cdot \text{K}$

It is required to calculate the equivalent brake horsepower (E.B.H.P.).

Solution:

1- Intake: The engine is underground test (zero flight speed and Mach number); then the total conditions are equal to the static conditions.

$$T_{02} = T_{0a} = T_a = 288\,\text{K}$$
$$P_{02} = P_{0a} = P_a = 1\,\text{bar}$$

Compressor: The outlet conditions are

$$P_{03} = \pi_c P_{02} = 8.5\,\text{bar}$$

With $C_{P_c} = 1.01$ kJ/kg K, then $\gamma_c = 1.397$

$$T_{03} = T_{02}\left[1 + \frac{\pi^{\frac{\gamma_c - 1}{\gamma_c}} - 1}{\eta_C}\right] = 567.094\ \text{K}$$
$$W_c = C_{P_c}(T_{03} - T_{02}) = 280\,\text{kJ/kg}$$

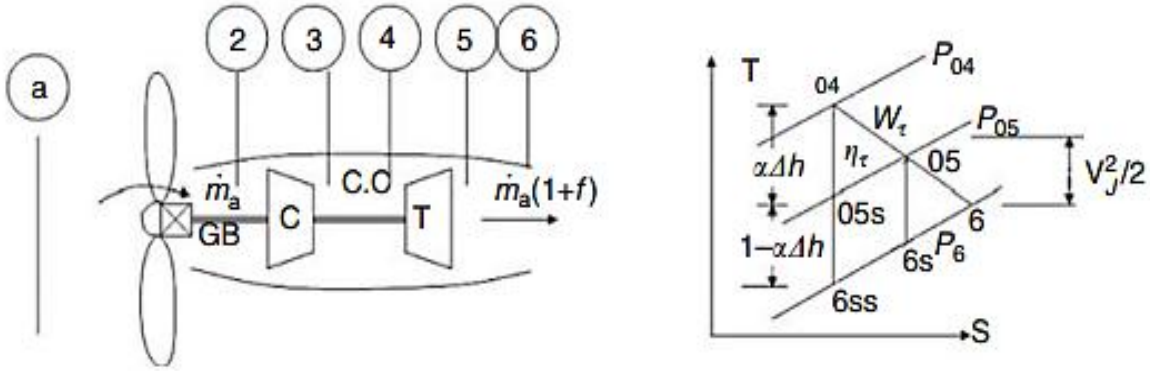

Combustion chamber: The pressure for gases leaving the combustion chamber is

$$P_{04} = 0.96\ P_{03} = 8.16\ \text{bar}$$

The fuel-to-air ratio and fuel mass flow rate are

$$f = \frac{C_{P_{C.C}} T_{04} - C_{P_C} T_{03}}{\eta_{C.C} Q_R - C_{P_{C.C}} T_{04}} = 0.0186$$
$$\dot{m}_f = 0.0186 \dot{m}_a = 0.271\ \text{kg/s}$$

Turbine: The enthalpy drop in the turbine and nozzle is

$$\Delta h = C_{P_t}(T_{04} - T_{6s}) = C_{P_t} T_{04}\left(1 - \frac{T_{6s}}{T_{04}}\right) = C_{P_t} T_{04}\left[1 - \left(\frac{P_6}{P_{04}}\right)^{(\gamma_t - 1/\gamma_t)}\right]$$

with $P_6 = P_a$, $\gamma_t = 1.336$, then

$$\Delta h = 571.3\,\text{kJ/kg}$$

From Figure 6.20,

since $\eta_n = \dfrac{V_J^2/2}{(1-\alpha)\Delta h}$ then $\alpha = 1 - \dfrac{V_J^2}{2\eta_n \Delta h} = 0.9424$

The turbine output specific power is

$$W_t = \eta_t \alpha \Delta h = 484.56\,\text{kJ/kg}$$

The specific power delivered to the propeller shaft is

$$W_{shaft} = \eta_m W_t - W_C = 194.87\,\text{kJ/kg}$$

The corresponding shaft power is

$$P_{shaft} = \dot{m}_a W_{shaft} = 2845\,\text{kW}$$

The jet thrust for zero flight speed is

$$T_J = \dot{m}_a[(1+f)\,V_J] = 3717.8\,\text{N}$$

The total power is the sum of propeller and jet thrust contribution

$$P_{total} = \eta_{pr} \times \eta_g \times P_{shaft}(\text{kW}) + \frac{T_J(N)}{8.5} = 2656.5\,\text{kW}$$

The horsepower is then

$$\text{ebhp} = \frac{P_{total}(\text{kW})}{0.7457} = 3562\,\text{hp}$$

Example 2-

The Bell/Boeing V-22 Tilt-rotor multimission aircraft is shown in Figure 6.5. It is powered by Allison T406 engine. The T406 engine has the following characteristics: Rotor is connected to a free power turbine.

Air mass flow rate	14 kg/s
Compressor pressure ratio	14
Turbine inlet temperature	1400 K
Fuel heating value	43,000 kJ/kg

During landing, it may be assumed that the air entering and gases leaving the engine have nearly zero velocities. The ambient conditions are 288 K and 101 kPa. The propeller efficiency and gear box efficiencies are 0.75 and 0.95. Assuming all the processes are ideal, calculate the propeller power during landing (γ_c = 1.4 and γ_h = 1.3299).

Solution: The ambient conditions are

$$T_a = 288\,\text{K}, \quad P_a = 101\,\text{kPa}$$

The flight and jet speeds are $V_f = V_j = 0$, with $\gamma_c = 1.4$, then $Cp_c = \gamma_c R/(\gamma_c - 1) = 1004.5\,\text{J/kg/K}$. Since $\gamma_h = 1.3299$, then $Cp_h = \gamma_h R/(\gamma_h - 1) = 1156.7\,\text{J/kg/K}$.

Intake

Since the flight Mach number is zero, then

$$T_{02} = T_{0a} = T_a\left(1 + \frac{\gamma_c - 1}{2}M^2\right) = 288\,\text{K}$$

$$P_{02} = P_{0a} = P_a\left(1 + \frac{\gamma_c - 1}{2}M^2\right)^{(\gamma_c/\gamma_c - 1)} = 101\,\text{kPa}$$

Compressor: For ideal compressor

$$T_{03} = T_{02}\left(\frac{P_{03}}{P_{02}}\right)^{\frac{\gamma_c - 1}{\gamma_c}} = T_{02}(\pi_c)^{\frac{\gamma_c - 1}{\gamma_c}} = 612.15\,\text{K}$$

$$P_{03} = \pi_c \times P_{02} = 1414\ \text{kPa}$$

Combustion chamber

$$T_{04} = 1400\,\text{K} \quad \text{and} \quad P_{04} = P_{03} = 1414\,\text{kPa}$$

Fuel-to-air ratio

$$f = \frac{Cp_h T_{04} - Cp_c T_{03}}{Q_{HV} - Cp_h T_{04}} = 0.02$$

Turbine: Energy balance between the compressor and turbine of the gas generator

$$W_c = W_t$$

$$\cancel{\dot{m}_a} Cp_c(T_{03} - T_{02}) = \cancel{\dot{m}_a}(1+f)Cp_h(T_{04} - T_{05})$$

$$T_{05} = T_{04} - \frac{Cp_c}{Cp_h(1+f)}(T_{03} - T_{02}) = 1125.37\,\text{K}$$

$$P_{05} = P_{04}\left(\frac{T_{05}}{T_{04}}\right)^{\frac{\gamma_h}{\gamma_h - 1}} = 586.47\,\text{kPa}$$

Free power turbine

$$\Delta h = h_{05} - h_{7S} = Cp_h(T_{05} - T_{7S})$$

$$\Delta h = Cp_h T_{05}\left(1 - \left(\frac{P_7}{P_{05}}\right)^{\frac{\gamma_h - 1}{\gamma_h}}\right) = 460376.7\ \text{J/kg}$$

$$\alpha_{opt} = 1 - \frac{V_f^2 \eta_n}{2\eta_{pr}^2 \eta_g^2 \eta_m^2 \eta_{fpt}^2 \Delta h} = 1$$

The free power turbine absorbs all the power in the gases leaving the gas generator turbine. Points (6) and (7) in Figure 6.16 are coincident. Thus

$$\Delta h = Cp_{\mathrm{h}}(T_{05} - T_{6\mathrm{S}}) = Cp_{\mathrm{h}}(T_{05} - T_{06})$$

from which $T_{06} = 727.36$ K.

Nozzle: There is no thrust generated as

$$Tj = \dot{m}_{\mathrm{a}}((1+f)V_{\mathrm{J}} - V_{\mathrm{f}}) = 0$$
$$P_{\mathrm{j}} = 0$$

The specific power absorbed in the propeller is

$$W_{\mathrm{pr}} = \eta_{\mathrm{pr}}\eta_{\mathrm{g}}\eta_{\mathrm{m}}\eta_{\mathrm{fpt}}\alpha\Delta h = 0.75 \times 0.95 \times 1 \times 1 \times 1 \times 460.3767 = 328.02\,\mathrm{kJ/kg}$$

The power consumed in the propeller is then

$$P_{\mathrm{pr}} = \dot{m}_{\mathrm{a}} W_{\mathrm{pr}} = 4592.26\ \mathrm{kW}$$
$$P_{\mathrm{t}} = P_{\mathrm{pr}} + P_{\mathrm{j}} = 4592.26\ \mathrm{kW}$$

The corresponding shaft horsepower is then

$$\mathrm{shp} = \frac{P_{\mathrm{t}}}{0.7457} = \frac{4592.26}{0.7457} = 6158.32\ \mathrm{hp}$$