Ex Replace the force and couple system shown in figure by an equivalent resultant force and couple moment acting at point "O".

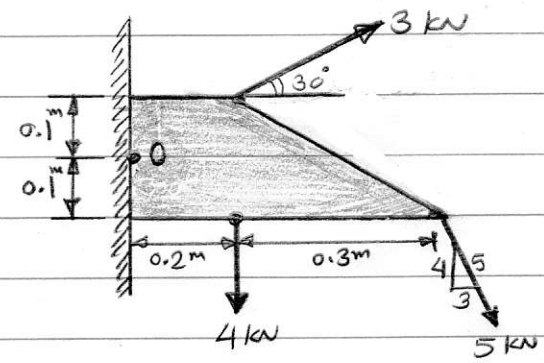

Solution:

اولاً: جمع القوى وايجاد محصلتها، يتم تحليل القوى الى مركباتها على محوري (x, y)

3^{KN} ; $F_{x3} = 3\cos 30\ KN \rightarrow$

$F_{y3} = 3\sin 30\ KN \uparrow$

5^{KN} ; $F_{x5} = 5 * \frac{3}{5}\ KN \rightarrow$

$F_{y5} = 5 * \frac{4}{5}\ KN \downarrow$

4^{KN} ; $F_{y4} = 4\ KN \downarrow$

$\therefore (F_R)_x = 3\cos 30 + 5 * \frac{3}{5} = 5.598\ KN \rightarrow$

$\therefore (F_R)_y = 3\sin 30 - 5 * \frac{4}{5} - 4 = -6.5\ KN$

or $= 6.5\ KN \downarrow$

$\therefore$ $\vec{F_R}$ magnitude, $F_R = \sqrt{(5.598)^2 + (-6.5)^2} = 8.578\ KN$

$\vec{F_R}$ direction, $\theta = \tan^{-1}\left|\frac{-6.5}{5.598}\right| = 49.26°$

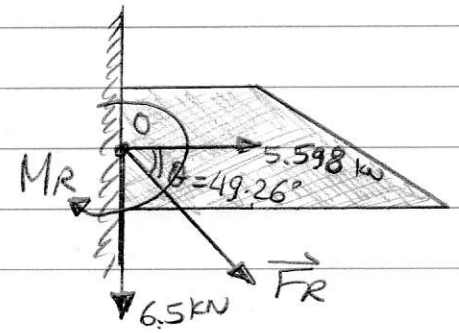

ثانياً: بعد ان تم ايجاد مقدار واتجاه محصلة القوى، وتم نقل هذه المحصلة ($\vec{F}_R$) الى نقطة (O)، يجب ان نجد العزم الذي يعوض عن تحرك ($\vec{F}_R$) ووضعها في نقطة "O" بمعنى آخر، ايجاد العزم حول نقطة (O) الناجم عن جميع القوى في المنظومة (او مركبات القوى)...

$$\Sigma (M_R)_{@O} = -(3\cos 30)(0.1) + (3\sin 30)(0.2) + (5 * \tfrac{3}{5})(0.1) - (5 * \tfrac{4}{5})(0.5) - (4)(0.2) = -2.46 \text{ kN.m}$$

$$\text{or} = 2.46 \text{ kN.m} \circlearrowright$$

<u>Ex</u> Replace the force and couple system acting on the member shown in figure by an equivalent resultant force and couple moment acting at point (O).

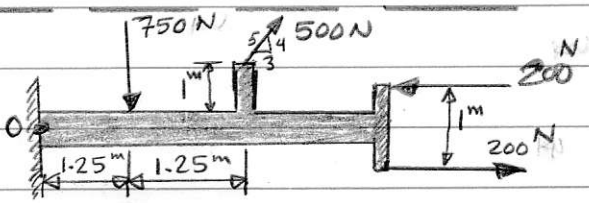

<u>Solution</u>:

اولاً: جمع القوى وايجاد محصلتها عند (O)

750 N ; $F_{y\,750} = 750 \text{ N} \downarrow$

500 N ; $F_{x\,500} = 500 * \frac{3}{5} \text{ N} \rightarrow$

$F_{y\,500} = 500 * \frac{4}{5} \text{ N} \uparrow$

200 and -200 N cancels each other in x-direction

$\therefore (F_R)_x = 300 \text{ N} \rightarrow$

$(F_R)_y = -750 + 500 * \frac{4}{5} = -350 \text{ N}$

$\text{or} = 350 \text{ N} \downarrow$

$\therefore$ $\vec{F}_R$ magnitude ; $F_R = \sqrt{(300)^2 + (-350)^2} = 461\ N$

$\vec{F}_R$ direction, $\theta = \tan^{-1}\left|\frac{-350}{300}\right| = 49.4^\circ$

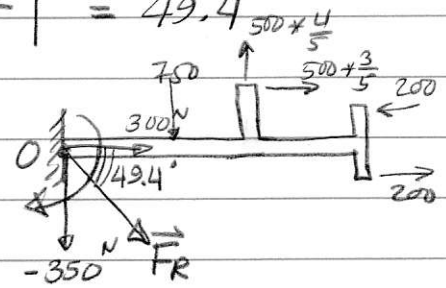

ثانياً: نجد محصلة العزوم حول (O) :-

$$M_{R@O} = -(750)(1.25) + \left(500 * \frac{4}{5}\right)(2.5) - \left(500 * \frac{3}{5}\right)(1) + (200)(1) \leftarrow \text{couple}$$

$$= -37.5\ N.m \quad \text{or} \quad = 37.5\ N.m \circlearrowright$$

<u>Ex</u> Replace the loading system by an equivalent resultant force and couple moment acting at (A).

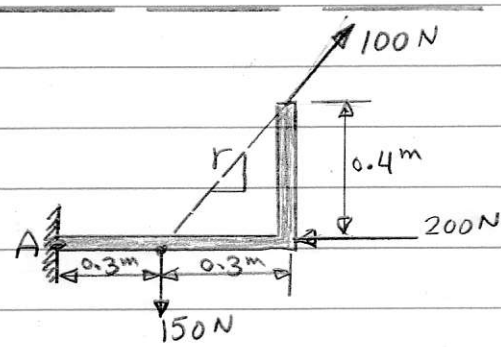

<u>Solution</u> :-

* Resolve forces ;

100^N ; $r = \sqrt{(0.3)^2 + (0.4)^2} = 0.5$

$\therefore$ $F_{x\,100} = 100\ \frac{0.3}{0.5}\ N \rightarrow$

$F_{y\,100} = 100\ \frac{0.4}{0.5}\ N \uparrow$

مركبات المحصلة * $(F_R)_x = 100 * \frac{0.3}{0.5} - 200 = -140\ N$ or $= 140^N \leftarrow$

$(F_R)_y = -150 + 100 * \frac{0.4}{0.5} = -70\ N$ or $= 70^N \downarrow$

$\therefore$ $\vec{F}_R$ magnitude, $F_R = \sqrt{(140)^2 + (70)^2} = 156.5\ N$

$\vec{F}_R$ direction, $\theta = \tan^{-1}\left|\frac{-70}{-140}\right| = 26.6^\circ$