## Poisson's Ratio:

If a bar is subjected to a tensile loading there will be an increase in length of the bar in the direction of the applied load, but there is also a decrease in a lateral dimension perpendicular to the load. It has been observed that for an elastic materials, the lateral strain is proportional to the longitudinal strain. The ratio of the lateral strain to longitudinal strain is known as the Poison's ratioand is denoted by ν.

Poison's ratio (ν ) = - lateral strain / longitudinal strain

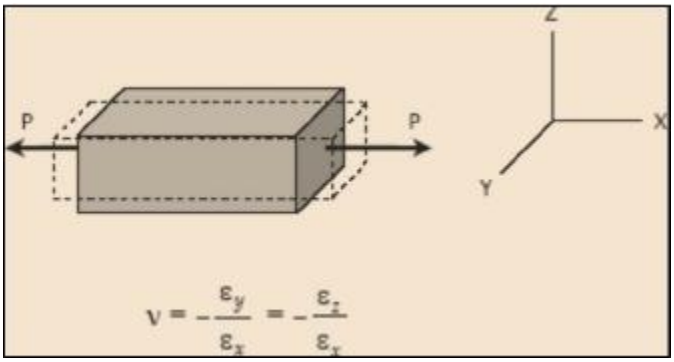


where $\varepsilon_x$ is strain in the x-direction and $\varepsilon_y$ and $\varepsilon_z$ are the strains in the perpendicular direction. The negative sign indicates a decrease in the transverse dimension when $\varepsilon_x$ is positive.

For most engineering materials the value of (ν) is between 0.15 and 0.33.

For most steel, it lies in the range of 0.25 to 0.3, and 0.20 for concrete.

## BIAXIAL DEFORMATION:

If an element is subjected simultaneously by Tensile stresses, $\sigma_x$ and $\sigma_y$, in the x and y directions, the strain in the x-direction is $\sigma_x$ / E and the strain in the y direction is $\sigma_y$ / E. Simultaneously, the stress in the y direction will produce a lateral contraction on the x-x direction of the amount ($-\nu\ \varepsilon_y$ or $-\nu\ \sigma_y/E$ ). The resulting strain in the x direction will be :

$$\varepsilon_x = \frac{\sigma_x}{E} - \nu\frac{\sigma_y}{E} \text{ or } \sigma_x = \frac{(\varepsilon_x + \nu\varepsilon_y)E}{1-\nu^2}$$

and

$$\varepsilon_y = \frac{\sigma_y}{E} - \nu\frac{\sigma_x}{E} \text{ or } \sigma_y = \frac{(\varepsilon_y + \nu\varepsilon_x)E}{1-\nu^2}$$

## TRIAXIAL DEFORMATION

If an element is subjected simultaneously by three mutually perpendicular normal stresses $\sigma_x$, $\sigma_y$, and $\sigma_z$, which are accompanied by strains $\varepsilon_x$, $\varepsilon_y$, and $\varepsilon_z$, respectively,

$$\varepsilon_x = \frac{1}{E}[\sigma_x - \nu(\sigma_y + \sigma_z)]$$

$$\varepsilon_y = \frac{1}{E}[\sigma_y - \nu(\sigma_x + \sigma_z)]$$

$$\varepsilon_z = \frac{1}{E}[\sigma_z - \nu(\sigma_x + \sigma_y)]$$

Tensile stresses and elongation are taken as positive. Compressive stresses and contraction are taken as negative.

## ***Shear Deformation and Shear Strain***

Shearing forces cause shearing deformation. An element subject to shear does not change in length but undergoes a change in shape.

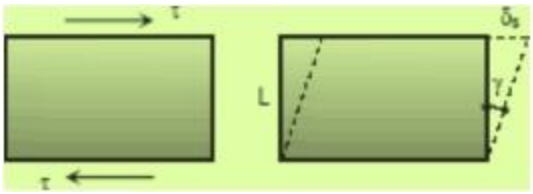


The change in angle at the corner of an original rectangular element is called the **Shear Strain** and is expressed as:

$$\gamma = \frac{\delta s}{L}$$

The ratio of the shear stress **τ** and the shear strain **γ** is called the **modulus of elasticity** in shear or modulus of rigidity and is denoted as G, in MPa.

$$G = \frac{\tau}{\gamma}$$

The relationship between the shearing deformation and the applied shearing force is :

$$\delta_s = \frac{VL}{A_s G} = \frac{\tau L}{G}$$

where **V** is the shearing force acting over an area $\mathbf{A_s}$.

**Relationship Between E, G, and ν**

The relationship between modulus of elasticity E, shear modulus G and Poisson's ratio ν is given as :

$$G = \frac{E}{2(1+\vartheta)}$$

**Bulk Modulus of Elasticity or Modulus of Volume Expansion, K**

The bulk modulus of elasticity K is a measure of a resistance of a material to change in volume without change in shape or form. It is given as :

$$K = \frac{E}{3(1-2\nu)} = \frac{\sigma}{\Delta V / V}$$

where V is the volume and ΔV is change in volume. The ratio ΔV / V is called **Volumetric Strain** and can be expressed as:

$$\frac{\Delta V}{V} = \frac{\sigma}{K} = \frac{3(1-2\nu)}{E}$$

## ***Solved Problems in Poison's ratio***

**Problem 222:** A solid cylinder of diameter d carries an axial load P. Show that its change in diameter is 4Pν / πEd.

**Solution 222**

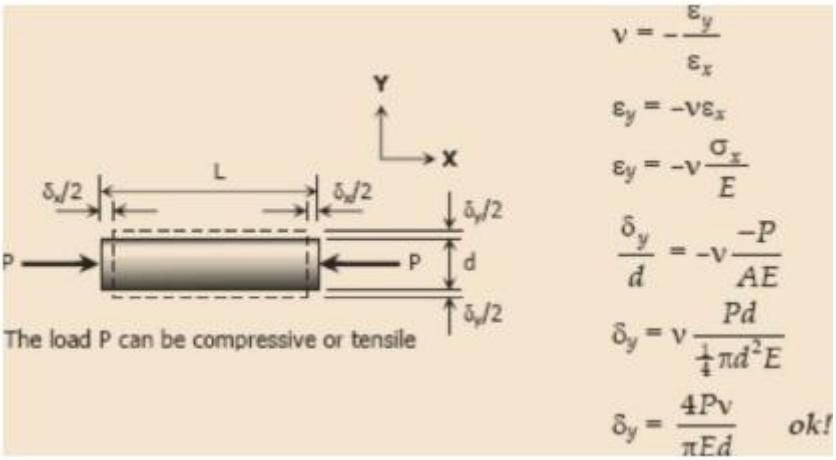


**Problem 223**: A rectangular steel block is 3 inches long in the x direction, 2 inches long in the y direction, and 4 inches long in the z direction. The block is subjected to a triaxial loading of three uniformly distributed forces as follows: 48 kips tension in the x direction, 60 kips compression in the y

direction, and 54 kips tension in the z direction. If $\nu = 0.30$ and $E = 29 \times 10^6$ psi, determine the single uniformly distributed load in the x direction that would produce the same deformation in the y direction as the original loading.

**Solution 223**

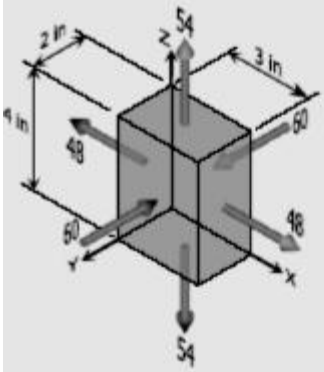


For triaxial deformation (tensile triaxial stresses):
(compressive stresses are negative stresses)

$$\varepsilon_y = \frac{1}{E}[\sigma_y - \nu(\sigma_x + \sigma_z)]$$

$$\sigma_x = \frac{P_x}{A_{yz}} = \frac{48}{4(2)} = 6.0 \text{ ksi (tension)}$$

$$\sigma_y = \frac{P_y}{A_{xz}} = \frac{60}{4(3)} = 5.0 \text{ ksi (compression)}$$

$$\sigma_z = \frac{P_z}{A_{xy}} = \frac{54}{2(3)} = 9.0 \text{ ksi (tension)}$$

$$\varepsilon_y = \frac{1}{29 \times 10^6}[-5000 - 0.30(6000 + 9000)]$$

$$\varepsilon_y = -3.276 \times 10^{-4}$$

$\varepsilon_y$ is negative, thus tensile force is required in the $x$-direction to produce the same deformation in the $y$-direction as the original forces.

For equivalent single force in the $x$-direction:
(uniaxial stress)

$$\nu = -\frac{\varepsilon_y}{\varepsilon_x}$$

$$-\nu\varepsilon_x = \varepsilon_y$$

$$-\nu\frac{\sigma_x}{E} = \varepsilon_y$$

$$-0.30\left(\frac{\sigma_x}{29 \times 10^6}\right) = -3.276 \times 10^{-4}$$

$$\sigma_x = 31\,666.67 \text{ psi}$$

$$\sigma_x = \frac{P_x}{4(2)} = 31\,666.67$$

$$P_x = 253\,333.33 \text{ lb (tension)}$$

$$P_x = \mathbf{253.33 \text{ kips (tension)}}$$

**Problem 224 :** For the block loaded triaxially as described in Prob. 223, find the uniformly distributed load that must be added in the x-direction to produce no deformation in the z-direction.

**Solution 224**

$$\varepsilon_z = \frac{1}{E}[\sigma_z - \nu(\sigma_x + \sigma_y)]$$

$\sigma_x = 6.0$ ksi (tension)
$\sigma_y = 5.0$ ksi (compression)
$\sigma_z = 9.0$ ksi (tension)

$$\varepsilon_z = \frac{1}{29 \times 10^6}[9000 - 0.3(6000 - 5000)]$$

$\varepsilon_z = 2.07 \times 10^{-5}$

$\varepsilon_z$ is positive, thus positive stress is needed in the $x$-direction to eliminate deformation in $z$-direction.

The application of loads is still simultaneous:
(No deformation means zero strain)

$$\varepsilon_z = \frac{1}{E}[\sigma_z - \nu(\sigma_x + \sigma_y)] = 0$$

$\sigma_z = \nu(\sigma_x + \sigma_y)$
$\sigma_y = 5.0$ ksi → (compression)
$\sigma_z = 9.0$ ksi → (tension)

$9000 = 0.30(\sigma_x - 5000)$
$\sigma_x = 35\,000$ psi

$\sigma_{added} + 6000 = 35\,000$
$\sigma_{added} = 29\,000$ psi

$$\frac{P_{added}}{2(4)} = 29\,000$$

$P_{added} = 232\,000$ lb
$P_{added} = 232$ kips

**Problem 225** : A welded steel cylindrical drum made of a 10-mm plate has an internal diameter of 1.20 m. Compute the change in diameter that would be caused by an internal pressure of 1.5 MPa. Assume that Poisson's ratio is 0.30 and E = 200 GPa.

**Solution 225**

$\sigma_y$ = longitudinal stress

$$\sigma_y = \frac{pD}{4t} = \frac{1.5(1200)}{4(10)}$$

$$\sigma_y = 45 \text{ MPa}$$

$\sigma_x$ = tangential stress

$$\sigma_x = \frac{pD}{2t} = \frac{1.5(1200)}{2(10)}$$

$$\sigma_x = 90 \text{ MPa}$$

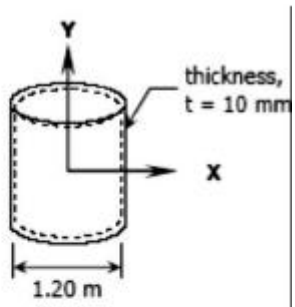


$$\varepsilon_x = \frac{\sigma_x}{E} - \nu\frac{\sigma_y}{E}$$

$$\varepsilon_x = \frac{90}{200000} - 0.3\left(\frac{45}{200000}\right)$$

$$\varepsilon_x = 3.825 \times 10^{-4}$$

$$\varepsilon_x = \frac{\Delta D}{D}$$

$$\Delta D = \varepsilon_x D = (3.825 \times 10^{-4})(1200)$$

$$\Delta D = 0.459 \text{ mm}$$

**Problem 226** : A 2-in.-diameter steel tube with a wall thickness of 0.05 inch just fits in a rigid hole. Find the tangential stress if an axial compressive load of 3140 lb is applied. Assume ν = 0.30 and neglect the possibility of buckling.

**Solution 226**

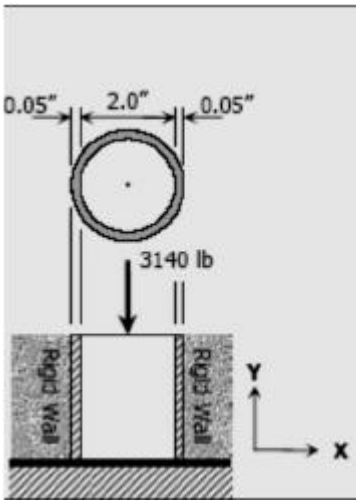


$$\varepsilon_x = \frac{\sigma_x}{E} - \nu\frac{\sigma_y}{E} = 0$$

$$\sigma_x = \nu\sigma_y$$

where $\sigma_x$ = tangential stress

$\sigma_y$ = longitudinal stress

$$\sigma_y = \frac{P_y}{A} = \frac{3140}{\pi(2)(0.05)}$$

$$\sigma_y = 31400/\pi \text{ psi}$$

$$\sigma_x = 0.30(31400/\pi)$$

$$\sigma_x = 9430/\pi \text{ psi}$$

$$\sigma_x = 2298.5 \text{ psi}$$

**Problem 227** : A 150-mm-long bronze tube, closed at its ends, is 80 mm in diameter and has a wall thickness of 3 mm. It fits without clearance in an 80-mm hole in a rigid block. The tube is then subjected to an internal pressure of 4.00 MPa. Assuming ν = 1/3 and E = 83 GPa, determine the tangential stress in the tube.

**Solution 227**

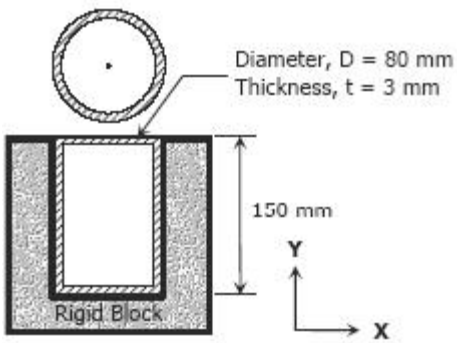


Longitudinal stress:

$$\sigma_y = \frac{pD}{4t} = \frac{4(80)}{4(3)}$$

$$\sigma_y = \frac{80}{3} \text{ MPa}$$

The strain in the $x$-direction is:

$$\varepsilon_x = \frac{\sigma_x}{E} - \nu\frac{\sigma_y}{E} = 0$$

$$\sigma_x = \nu\sigma_y = \text{tangential stress}$$

$$\sigma_x = \frac{1}{3}\left(\frac{80}{3}\right)$$

$$\sigma_x = 8.89 \text{ MPa}$$

STREMGTH OF MATERIALS